PANASONIC NV-M25

MODEL

SERVICE MANUAL

ORDER NO. VRD8911M166

Service Manual

General Description
Adjustment Procedures
Block/Schematic Diagrams
Exploded Views/Parts List

National VHS HQ PAL

VHS Movie

NV-M1000 EN EM

AC Adaptor

VW-AM10 EN EM

Line Adaptor

VW-KM10EN

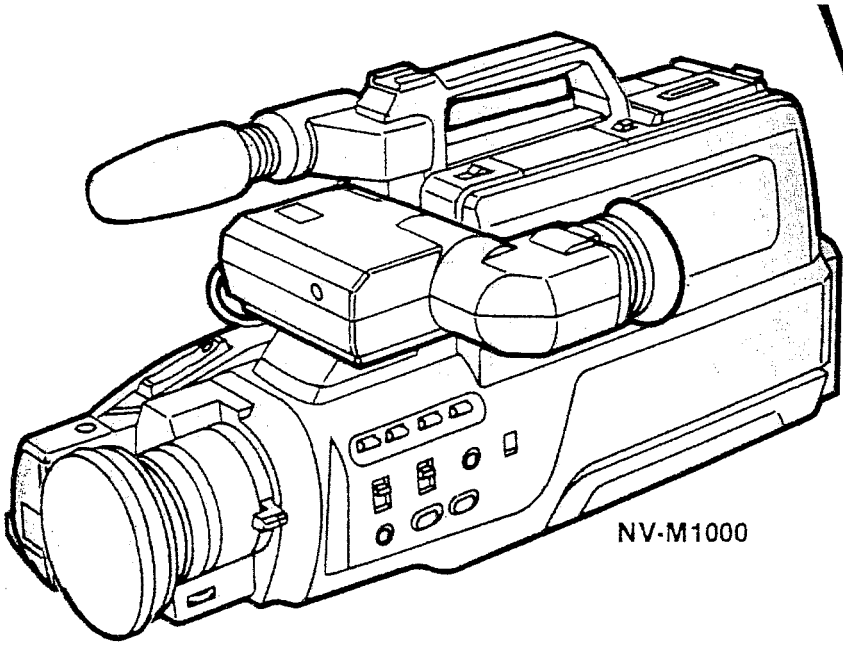

NV-M1000

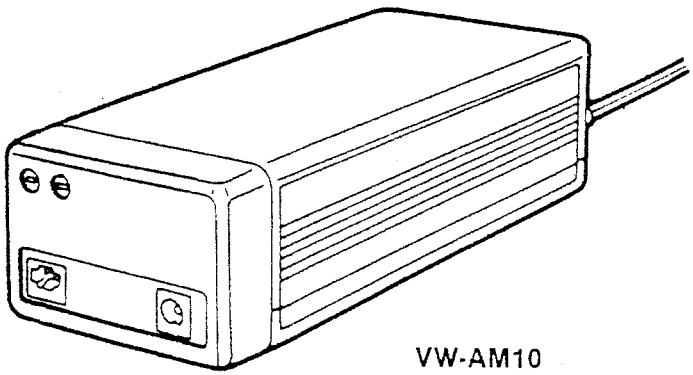

VW-AM10

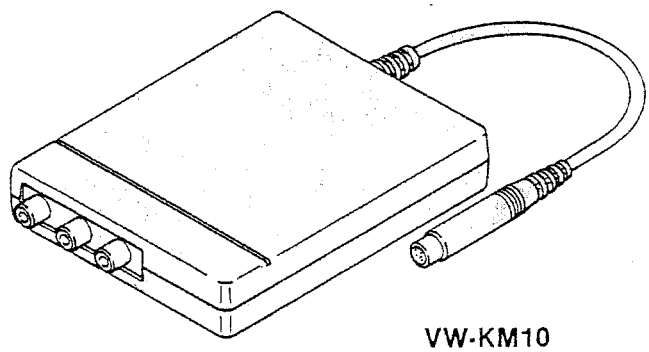

VW-KM10

National

Matsushita Electric Industrial Co., Ltd.
Central P.O. Box 288, Osaka 530-91, Japan

INTRODUCTION

This service manual contains technical information which will allow service personnels to understand and service this model.
Section 1 presents you with some general information of features and controls, enabling you to become familiar with each function.
Section 2 contributes to your mechanical and electrical adjustment as well disassembly and replacement procedures.
In the case of very common information relating to other models like mechanical adjustments, please refer to each service manual.
Section 3 contains block diagrams which offers you information for checking and understanding each circuit. Schematic diagrams which give you detailed information such as waveforms, voltage data, function e.t.c...
Section 4 contains exploded views and parts list.
Please place orders using the parts list and not the drawing reference numbers.
If the circuit is changed or modified, this information will be followed by supplementary service manual to be filed with original service manual.

Technical Information

SERVICE CAUTION

1. PREPARATION FOR CAMERA ADJUSTMENT

Remove cabinet parts and remove camera section from VTR refering disassembly section and place them as shown in Fig. T1.

Connection of Extension Cable (A) (VFK0430) and Camera Holder (refer to next item) are necessary for servicing.

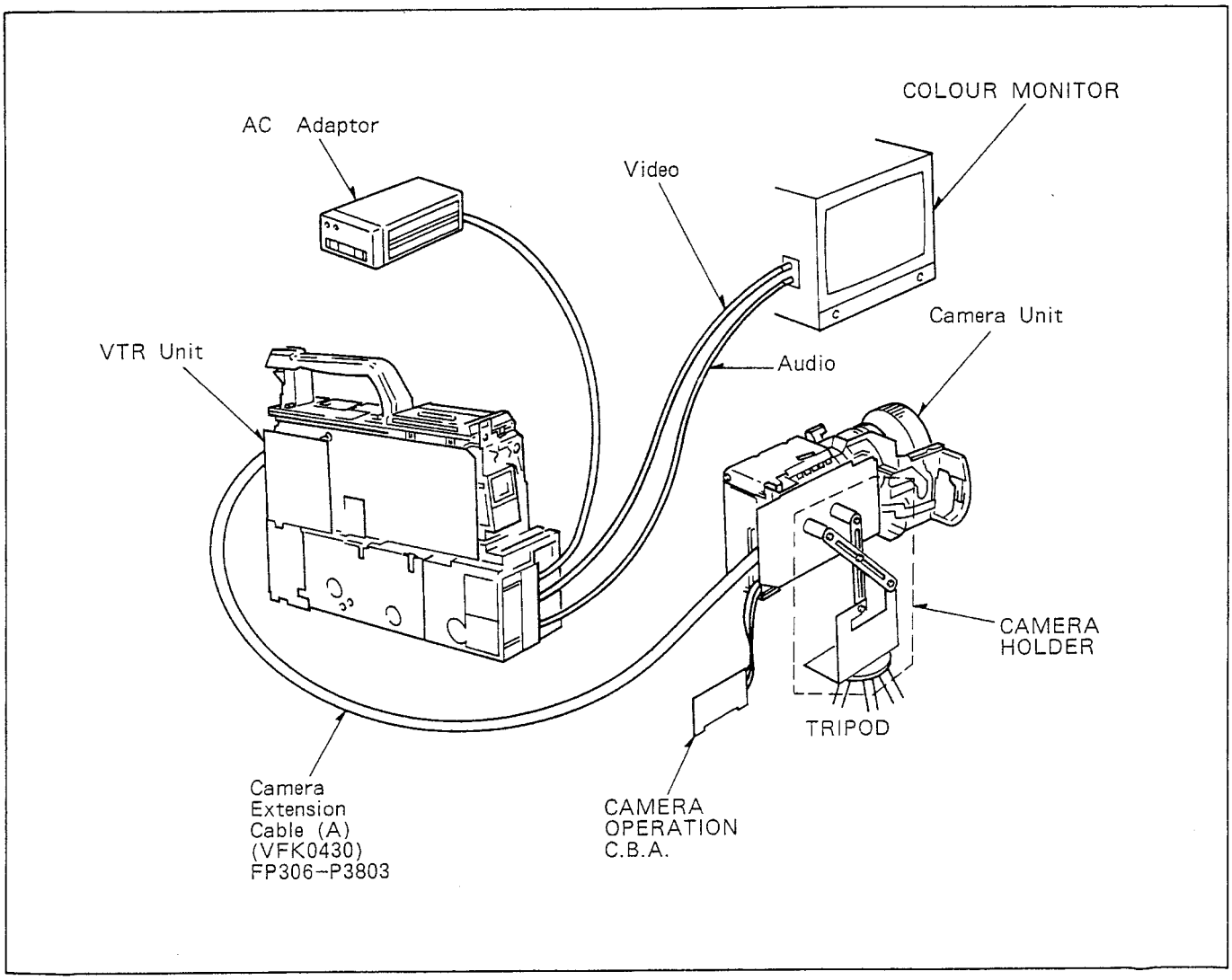

Fig. T1

2. HOW TO USE CAMERA HOLDER ARM (VEK0431)

This Camera Holder Arm which is adjustable the span must be mounted to VFK0382 (Camera Holder of NV-M5) and it can be used with VFK0432 for camera adjustments or checking for NV-M1000EN/EM.

(A) ---	VFK0613	Holder Spacer (2pcs)
(B) ---	VFK0431	Camera Holder Arm
(C) ---	XSN26+25	Screw (2pcs.)
(D) ---	VFK0382	Camera Holder

(1) Fix the Holder Arm (4) and (5) temporarily by screw (1) as shown in Fig. T2.
(2) Mount the Camera Holder Arm (B) to the Camera Holder (D) by screws (2) and (3) as shown in Fig. T3.
(3) Tightn the screws (C) with the Holder Spacers (A) as shown in Fig. T2.

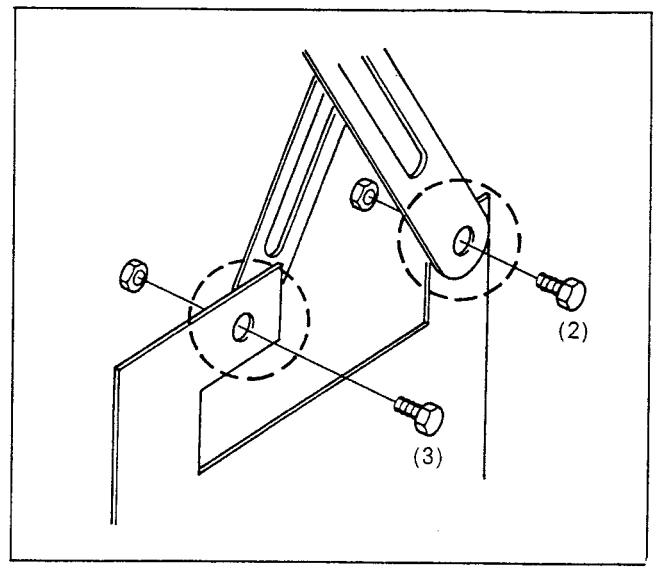

Fig. T3

Fig. T2

3. SERVICE THE CAMERA SECTION

When servicing the Camera Section, connection of 18Pin Extension Cables (B) (VFK0380X2pcs) is necessary as shown in Fig. T4.

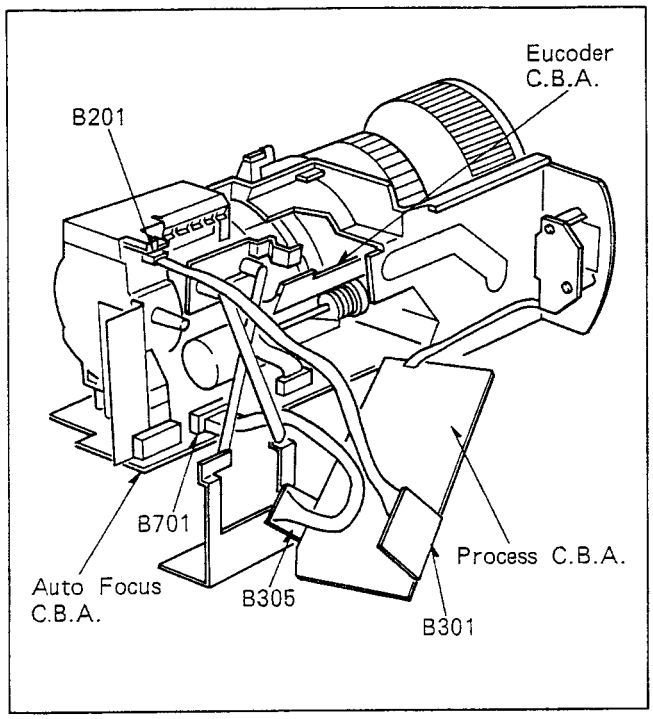

Fig. T4

4. HOW TO REPLACE THE LENS UNIT

1. REPLACEMENT AND ADJUSTMENT PROCEDURES
(REPLACEMENT OF FOCUS LENS UNIT)

(1) Remove the Camera Unit from the VHS Movie.
(2) Remove the C.B.As (Proscess, Auto Focus, Sensor) and Lens Cover from Camera Unit.
(3) Unscrew the Screw (A) and remove the zoom Motor Unit.
(4) Unscrew the Screw (B) amd remove the Focus Motor Unit.
(5) Unscrew the Screw (C) and remove the Focus Drive Unit.
(6) Unscrew the Screw (D) and remove the Encoder C.B.A.
(7) Unscrew the Screw (E) and remove the Lens Angle B.

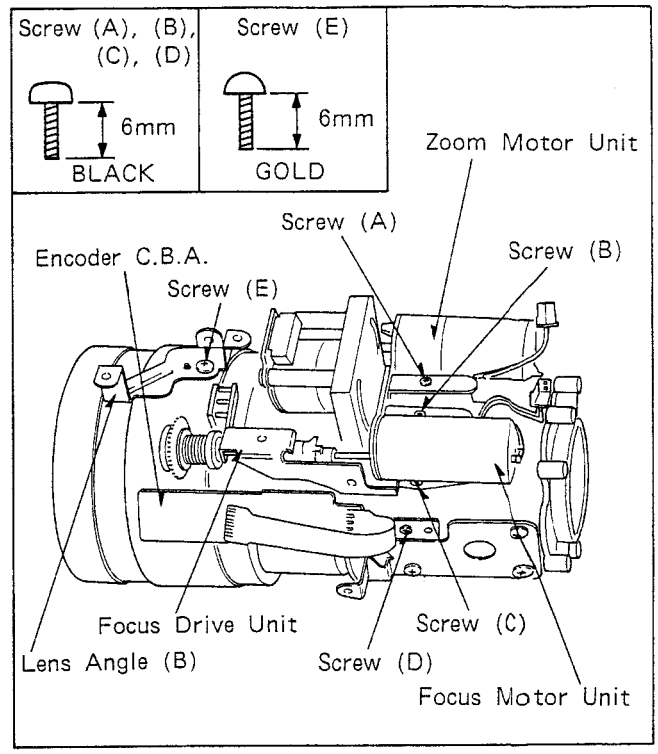

Fig. T5

(8) Remove the Focus Fastener and Tape as shown in below.
(9) Remove the Focus Ring by turning the Focus Adjustment Pitch to the counter clockwise.

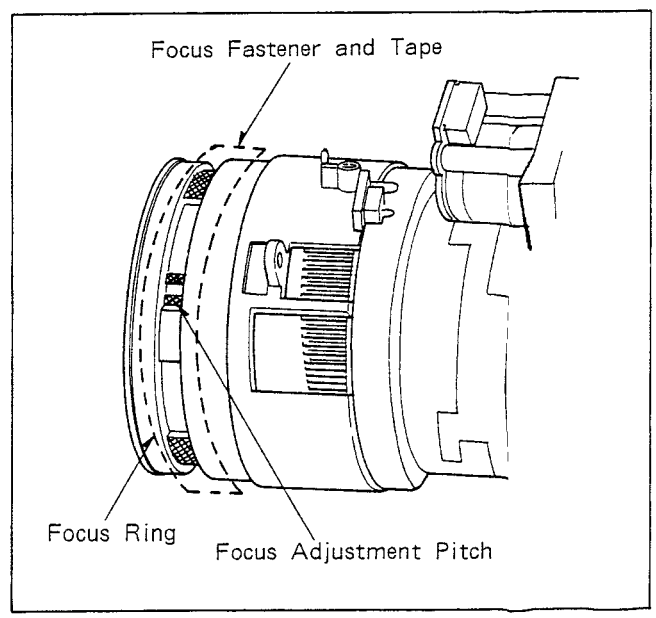

Fig. T6

(10) Unscrew 4 Screws (F) and remove the Focus Lens Unit with Iris Unit as shown in below.
(11) Remove the Iris Unit from Focus Lens Unit and replace the Focus Lens Unit.

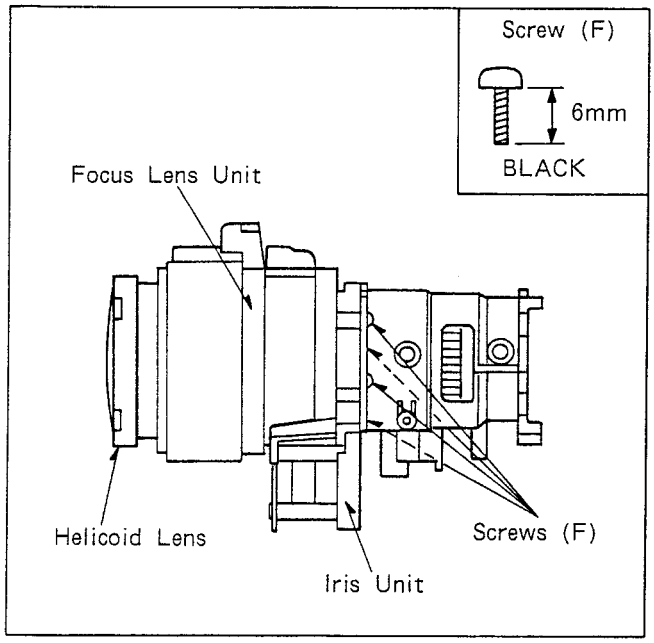

Fig. T7

[ADJUSTMENT PROCEDURES]

Note:

Do not remove the Helicoid Lens from Focus Lens Unit because they have the relationship to be paired.
If the Helicoid Lens is happened to be removed, the Helicoid Lens should be installed as following step.

a. Install the Helicoid Lens so that the projection with groove on Helicoid Lens comes to the portion "A" on lens unit as show in below.

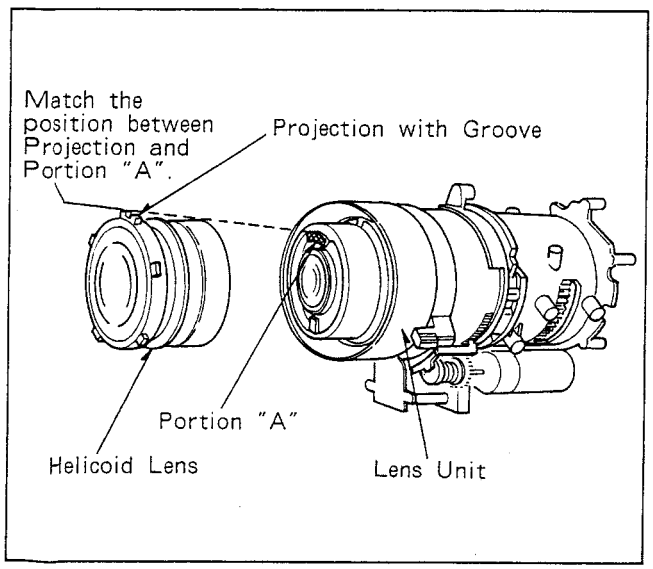

Fig. T8

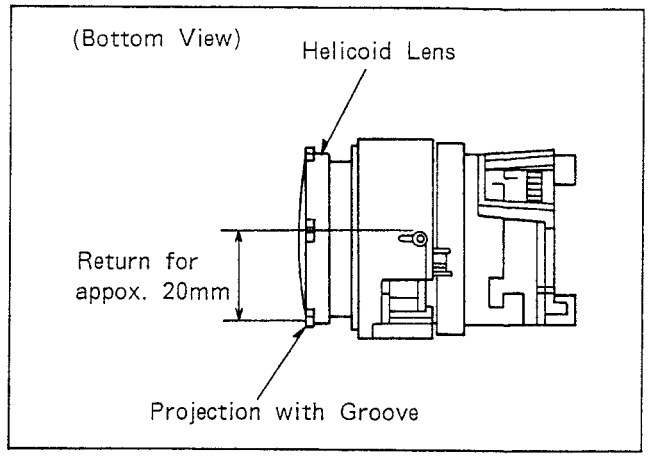

Fig. T9

(12) After replacing the Focus Lens Unit, Install the Iris Unit to Focus Lens Unit.
(13) Install the Focus Lens Unit with Iris Unit and then tighten 4 Screws (F) as shown in Fig. T7.
(14) Adjust the Helicoid Lens position as follows.

a. Turn the Helicoid Lens to fully clockwise and return it for approx. 20mm (so that next installation become easy) as shown in Fig. T9.

(15) Install the Focus Ring so that the Portion "B" on Focus Ring comes to Projection with Groove on Focus Lens Unit as shown below.

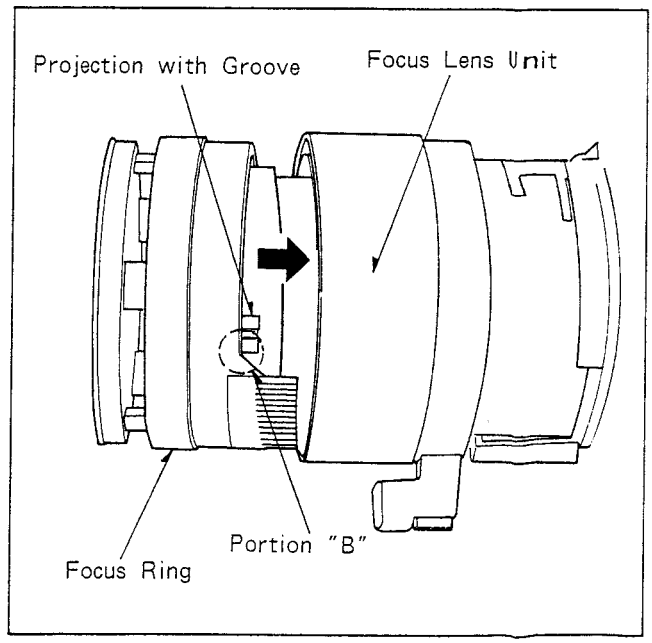

Fig. T10

(16) In order to lock the Focus Ring, Turn the Focus Adjustment Pitch to clock wise.

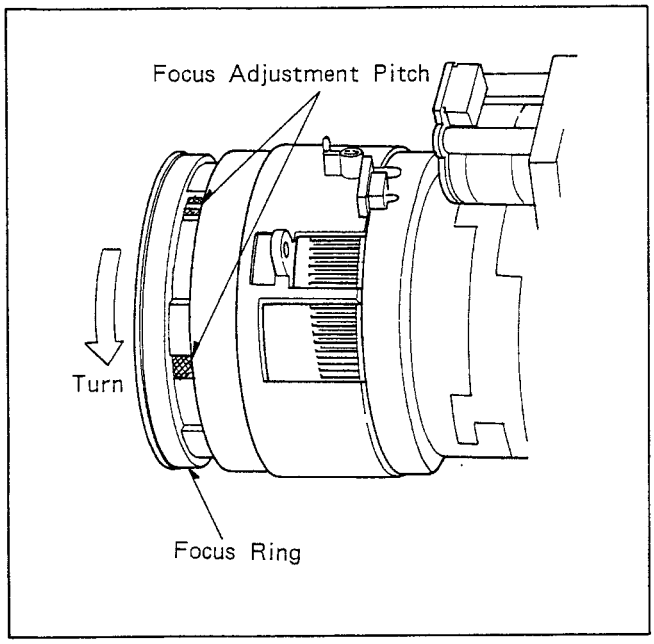

Fig. T11

(17) Install the Focus Fastener and Tape as shown in Fig. T6.
(18) Install the C.B.As (Process, Auto Focus, Sensor, Encoder) and Zoom Motor in reverse assembly order.
(19) After installation of the Focus Ring, Adjust the position of Back Focus Picth as follows.

a. Prepare the Hunting chart for object and aim the camera at the hunting chart 3m distance.
b. Focus the Lens on the object.
c. Confirm that Focus Ring indicates 3m.
d. Adjust the Back Focus Pitch so that the sharpest focus is obtained.
e. Zoom all the way back and adjust hte Back Focus Pitch so that the sharpest focus is obtained.
f. Repeat the procedure as follows, Zoom In, Focus, Zoom Out and adjust the Back Focus Pitch until the best focus is obtained over the entire zoom range.

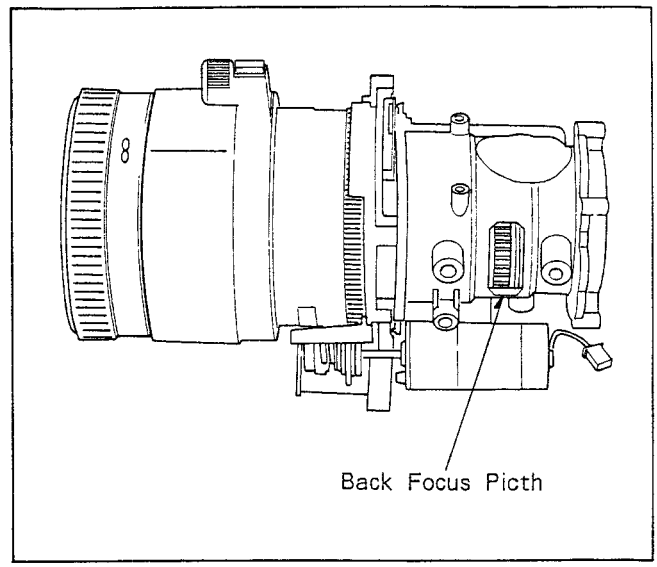

Fig. T12

SERVICE INFORMATION

1-1.HOW TO CHECK THE CRACKED CHIP PART

(1) Apply heat to the soldered portions of chip part using a soldering iron for about 2-3 seconds.
(2) If the chip part is faulty,it will be broken or cracked.

Caution: Do not leave soldering iron on the PCB too long as damage may occur to the PCB or the chip parts.

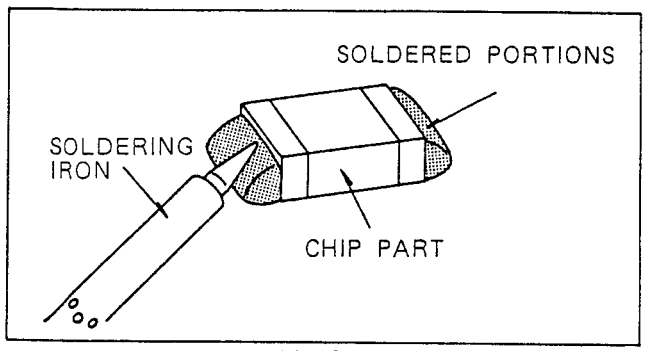

FIG. G1

Note: Regarding intermittent faults
The main causes of these faults are poor soldering and cracked chip parts.

1-2.HOW TO REPLACE THE CHIP PART

1) REMOVAL (RESISTOR, CAPACITOR, etc...)

(1) Presolder the one side of soldering portion for chip part and grasp the chip part by tweezers.

(2) Melt the presoldered portion. And then remove the chip part with a twisting motion while melting the soldering portion of another side quickly.

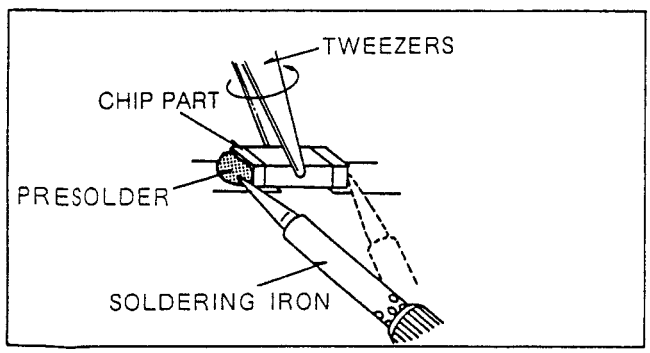

FIG. G2

2) REMOVAL (transistor, diode, etc...)

(1) Grasp the chip part with tweezers and melt the solder of one lead.

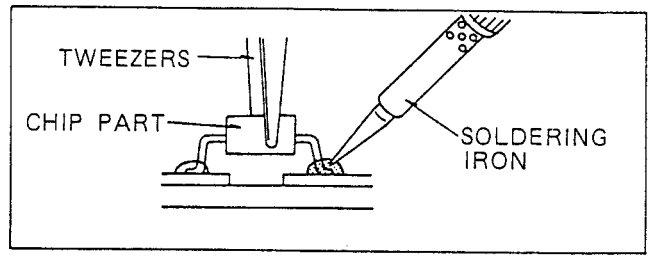

FIG. G3

(2) Lift the side of that lead upward.

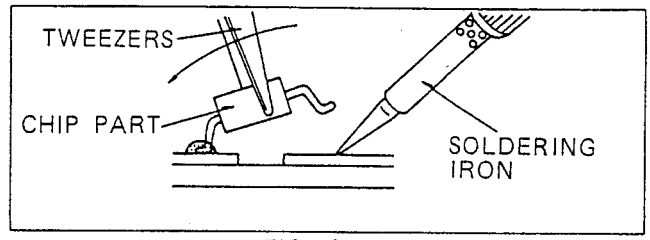

FIG. G4

Caution: Do not lift the chip part too high as damage may occur to the PCB or the leads that are still soldered on the PCB.

(3) Simultaneously heat the solder of the two remaining leads and lift part to remove.

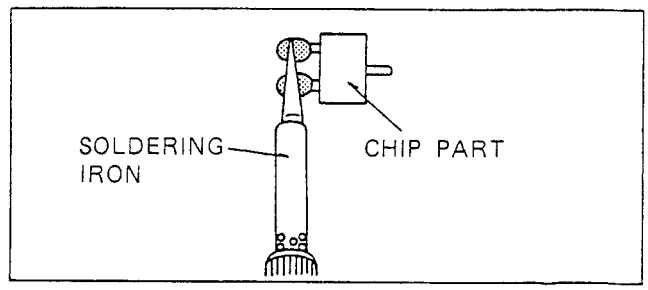

FIG. G5

3) INSTALLATION

(1) Presolder the one side of contact point on the circuit board.

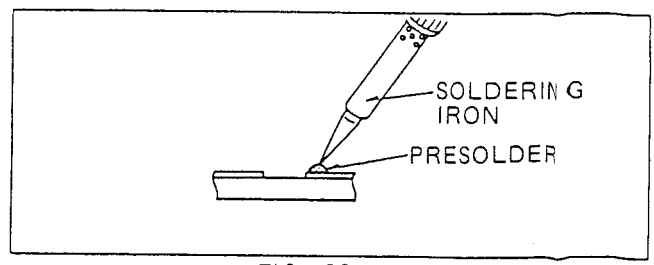

FIG. G6

(2) To install the chip part,hold in position using tweezers, apply heat to the pre-soldered portions using a fine tip soldering iron.
(3) Solder the other side of the chip part.
(4) Check your soldering.

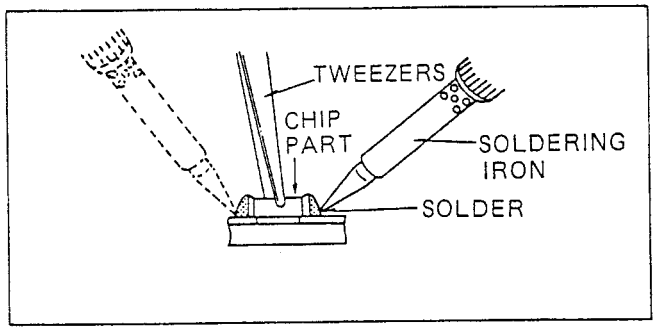

FIG. G7

1-3.HOW TO REMOVE THE FLAT-IC

(WITH HOT-AIR FLAT-IC DESOLDERING MACHINE)

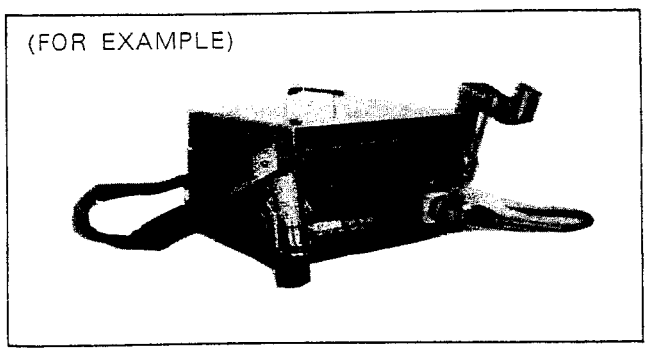

FIG. G8

(1) Prepare the HOT-AIR FLAT-IC DESOLDERING MACHINE. And then apply hot air to FLAT-IC about 5 ~ 8 seconds.

(2) Remove the FLAT-IC with tweezers while applying the hot air.

Caution: Do not supply the hot air to the chip parts around the Flat-IC for long time as as damage may occur to the chip parts around the Flat -IC.

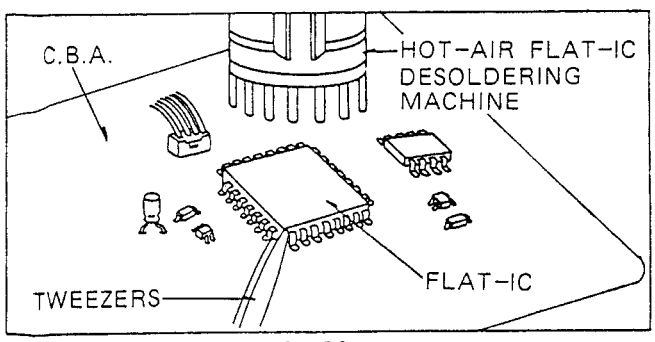

FIG. G9

(WITH SOLDERING IRON)

(1) Using solder braid remove the solder from all pins of the Flat-IC.
When you use the solder flux which is applied to all pins of the Flat-IC,you can remove it easily.

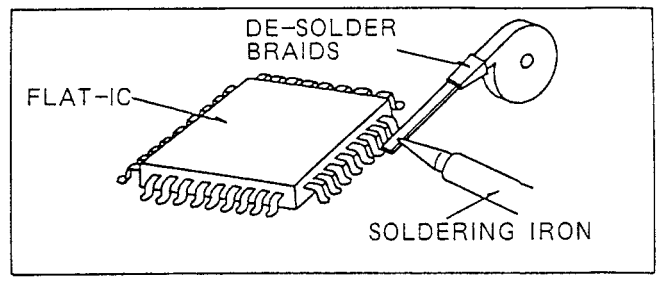

FIG. G10

(2) Lift each lead of the Flat-IC upward one by one using a sharp pin or non solder wire(iron wire),while heating the pins using a fine tip soldering iron or a hot air blower.

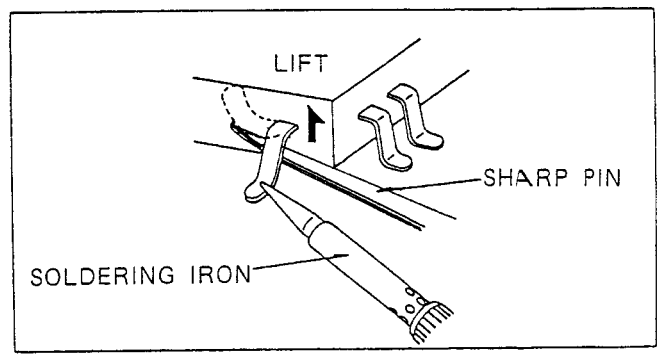

FIG. G11

(WITH IRON WIRE)

(1) Affix the wire to workbench or solid mounting point as shown in FIG.G12.
(2) Pull up wire as the solder melts so as to lift the IC lead from the PCB contact pad,while heating the pins using a fine tip soldering iron or hot air blower.

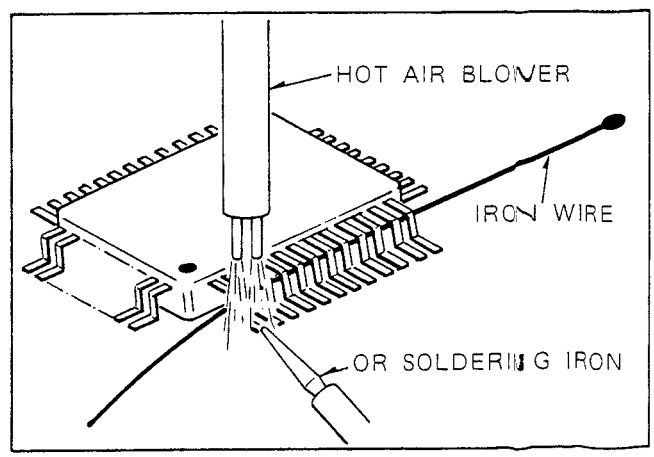

FIG.G12

Note: When using a soldering iron care must be taken to ensure that the Flat IC is not being held by glue before it is the PCB may be damaged if force is used.

VHS Movie

NV-M1000EN EM

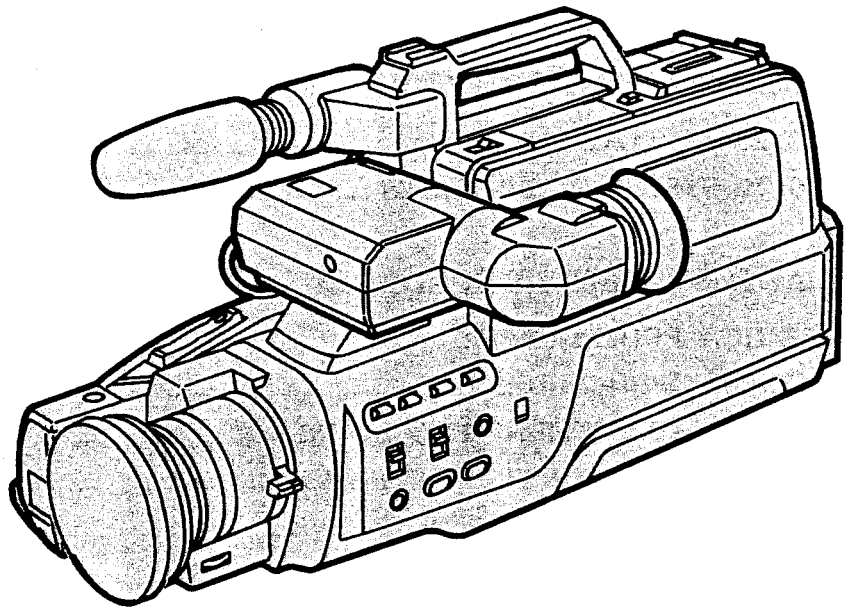

SPECIFICATIONS

ITEM	SPECIFICATION
POWER	Source: BATTERY; DC 12V Consumption; Recording mode; 8.7W (Battery operation)
VIDEO RECORDING SYSTEM	4 rotary heads, helical scanning system PAL
TAPE FORMAT	VHS-C Cassette Tape (Tape width 12.7mm)
TAPE SPEED	23.39mm/s Record/Playback Time 24min. with NV-E240 FF/REW Time less than 12min. with NV-E180
CAMERA	Pick-up Element: CCD (Charge Coupled Device)
	Standard Illumination: 1,400 lux
	Minimum Required Illumination: 10 lux
	Lens: Built-in 8 : 1, Power Zoom Lens with MACRO Function, Auto Iris, Auto Focus System, F1.2 (8.5~68mm), Lens Front Diameter/φ49mm
	View Finder: 2/3" Electric View Finder
VIDEO	Heads: 4 rotary heads, 1 flying erase head
	Input: ADAPTOR (10P): Y signal, $1.75^{-0.5}_{-0.2}$Vp-p 1.5kΩ DC 1.95±0.2V C Burst signal, 500±75mVp-p (RED/BURST 1.75±0.3Vp-p) 22kΩ DC 1.75±0.2V
	Output: (PHONO Type); 1.0Vp-p 75Ω unbalanced

ITEM	SPECIFICATION
AUDIO	Head: 1 Stationary head (Normal Audio)
	Input: ADAPTOR (10P); −10dB, 47kΩ unbalanced MIC IN (M3); −70dB, 4.7kΩ unbalanced
	Output: (PHONO Type); −8dB 600Ω unbalanced Head Phone (M3); −21dB, 32Ω unbalanced
WEIGHT	Approx. 2.7kg (without Battery Pack)
DIMENSIONS	134(W)×228.8(H)×429(D)mm
STANDARD ACCESSORIES	1 pc. AV Output Cable 1 pc. AC Adaptor 1 pc. Battery Pack 1 pc. Shoulder Strap 1 pc. Battery for Clock 1 pc. Cassette Tape 1 pc. DC Input Cable 1 pc. System Carrying Case (NV-M1000EM Only) 1 pc. Battery Pack Charging Connector 1 pc. RF Adaptor 1 pc. Power Plug Adaptor (NV-M1000EM Only)

Weight and dimensions shown are approximate.
Specifications are subject to change without notice.

CONTENTS

TECHNICAL INFORMATION

SERVICE INFORMATION

SECTION 1 GENERAL DESCRIPTION

1-1. CONTROLS AND COMPONENTS 1-1
1-2. VHS MOVIE SYSTEM ACCESSORIES 1-4

SECTION 2 ADJUSTMENT PROCEDURES

2-1. DISASSEMBLY PROCEDURES 2-1
2-2. REPLACEMENT PROCEDURES 2-8
2-3. MECHANICAL ADJUSTMENT PROCEDURES 2-11
2-4. ELECTRICAL ADJUSTMENT PROCEDURES 2-21
LOCATION OF TEST POINTS & CONTROLS (1) 2-35
LOCATION OF TEST POINTS & CONTROLS (2) 2-36

SECTION 3 BLOCK DIAGRAM & SCHEMATIC DIAGRAM

3-1. CAMERA STAGE BLOCK DIAGRAM 3-1
3-2. LUMINANCE & CHROMINANCE BLOCK DIAGRAM 3-5
3-3. SYSTEM CONTROL BLOCK DIAGRAM 3-9
3-4. SERVO BLOCK DIAGRAM 3-12
3-5. POWER SUPPLY BLOCK DIAGRAM 3-15
3-6. CAMERA OPERATION C.B.A. 3-17
3-7. CAMERA OPERATION SCHEMATIC DIAGRAM 3-19
3-8. E.V.F. SCHEMATIC DIAGRAM 3-21
3-9. E.V.F. C.B.A. 3-23
3-10. AWT SCHEMATIC DIAGRAM 3-25
3-11. AWT C.B.A. 3-25
3-12. PROCESS SCHEMATIC DIAGRAM 3-27
3-13. PROCESS C.B.A. 3-31
3-14. CCD DRIVE SCHEMATIC DIAGRAM 3-35
3-15. CCD DRIVE C.B.A. 3-37
3-16. AUTO FOCUS SCHEMATIC DIAGRAM 3-39
3-17. AUTO FOCUS C.B.A. 3-42
3-18. MAIN C.B.A. & VTR OPERATION C.B.A. 3-44
3-19. POWER SUPPLY SCHEMATIC DIAGRAM 3-50
3-20. SERVO SCHEMATIC DIAGRAM 3-52

3-21. SYSTEM CONTROL SCHEMATIC DIAGRAM 3-57
3-22. AUDIO SCHEMATIC DIAGRAM 3-61
3-23. AUDIO INTERFACE SCHEMATIC DIAGRAM 3-63
3-24. SUB VIDEO & HEAD AMP SCHEMATIC DIAGRAM 3-65
3-25. LUMINANCE & CHROMINANCE C.B.A. 3-68
3-26. LUMINANCE & CHROMINANCE SCHEMATIC DIAGRAM 3-71
3-27. VTR JACK SCHEMATIC DIAGRAM 3-75
3-28. VTR JACK C.B.A. 3-77
3-29. CIRCUIT BOARD LAYOUT 3-79
3-30. CAMERA INTERCONNECTION SCHEMATIC DIAGRAM 3-80
3-31. VTR INTERCONNECTION SCHEMATIC DIAGRAM 3-82
3-32. ICs & TRs INFORMATION 3-84

SECTION 4 EXPLODED VIEWS & PARTS LIST

4-1. EXPLODED VIEWS 4-1
❶ CAMERA LENS SECTION 4-1
❷ MECHANISM SECTION (1) 4-2
❸ MECHANISM SECTION (2) 4-3
❹ CHASSIS & FRAME SECTION 4-4
❺ E.V.F. SECTION 4-6
❻ PACKING PARTS & ACCESSORIES SECTION (NV-M1000EM) 4-7
❼ PACKING PARTS & ACCESSORIES SECTION (NV-M1000EN) 4-8
4-2. MECHANICAL REPLACEMENT PARTS LIST 4-9
4-3. ELECTRICAL REPLACEMENT PARTS LIST 4-12

SECTION 1
GENERAL DESCRIPTION

1-1. CONTROLS AND COMPONENTS

RIGHT VIEW

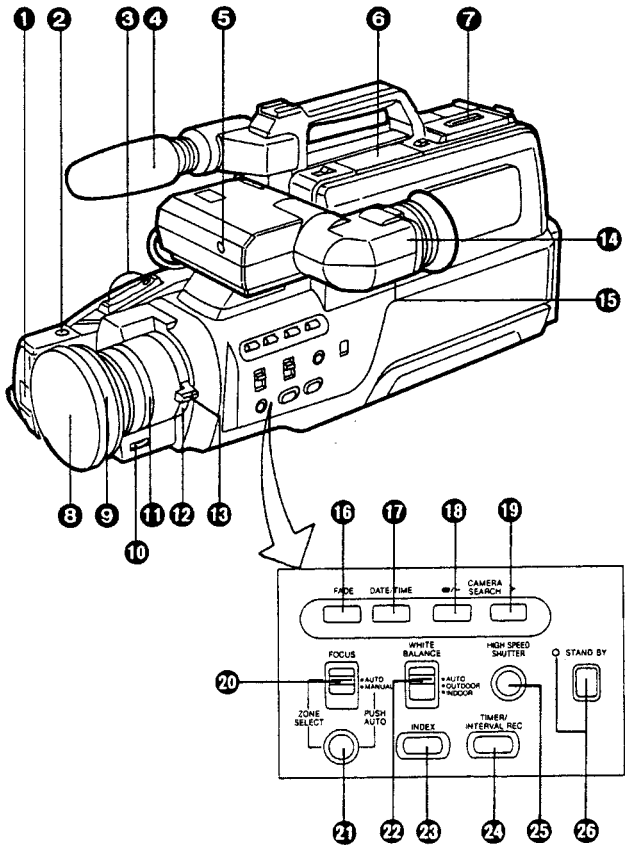

❶ White Balance Sensor Window
❷ Start/Stop Button
❸ Power Zoom Control Button
❹ Built-in Microphone
❺ Tally Indicator
❻ General Operation Controls

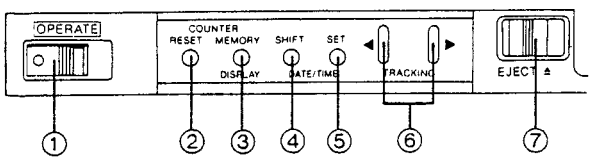

① Operation On/Off Switch
② Reset Button
③ Memory Button
④ Date Shift Buton
⑤ Date Set Button
⑥ Tracking Adjust Buttons
⑦ Eject Switch

❼ Tape Running Buttons

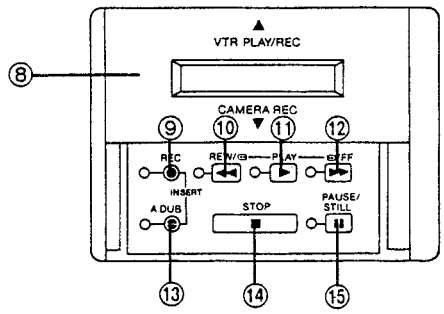

⑧ Camera/VTR Operation Selector Cover

Closed ..... For camera recording.
Open (as illustrated) ..... For other operations than camera recording.

⑨ Record Button
⑩ Rewind/Review Button
⑪ Play Button
⑫ Fast Forward/Cue Button
⑬ Audio Dubbing Button
⑭ Stop Button
⑮ Pause/Still Button

❽ Lens Cap
❾ Lens Hood
❿ Iris Close/Open Control

When a Subject is backlit:
Turn in the "OPEN" direction.

•When shooting a backlit subject, be careful that the lens is not aimed at extremely bright light.

When the picture is too bright:
Turn in the "CLOSE" direction.

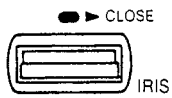

•For normal lighting conditions, this control should be set to the centre detent position. (Automatic adjustment)

⓫ Focus Ring
⓬ Zoom Ring
⓭ Manual Zoom Lever with Macro Button
⓮ Electronic Viewfinder

The following indications are displayed in the Electronic Viewfinder (EVF) to inform you of the operating conditions of the VHS Movie.

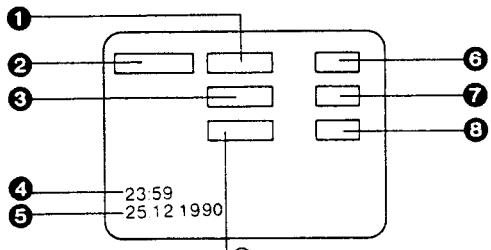

Warning/Alarm Indications — **Recording Indication Lamp**

There is little battery power left. The VHS Movie will be turned off in a few minutes. Replace the battery pack by a fully recharged one.

It is impossible to record because the erasure prevention tab of the cassette is not intact.

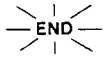

During recording, the tape has reached its end. Replace the tape with a new one.

When condensation has formed inside the VHS Movie, the "DEW" indication will flash and a few seconds later, the unit will turn itself off.

Video Head Clogging (see page 40).

❶ **Remaining Battery Power/Index Indication**

E----F	The "▬" indications begin to disappear from right to left as the power of the battery pack weakens.
INDEX	This indicator flashes when a recording is started or when the Index Signal Recording Button is pressed and it indicates that an index signal is being recorded.

❷ **Self-Timer/Interval Indication**

SELF-20S	Self-timer recording for 20 secondes.
SELF-END	Self-timer recording until the end of the tape.
INTERVAL	Recordings of approx. 1 second will be made at 1-minute intervals for up to 10 hours.

❸ **Counter Indication**

M0123	Tape Counter
0:12.34	Lap Time Counter

❹ **Clock Indications**

❺ **Date Indications**

❻ **Camera Mode Indication**

PAUSE	Recording Pause, Rec Review
REC	Recording
◁ ◁	Camera Search (In reverse direction)
▷	Camera Search (In forward direction)

VTR Mode Indication

◁ ◁	Rewind/Review
▷ ▷	Fast Forward/Cue
▷	Play
II	Still
INST▷	Insert
INSTII	Insert Pause
A.DUB▷	Audio Dubbing
A.DUBII	Audio Dubbing Pause
REC▷	Recording
RECII	Recording Pause

❼ **High Speed Shutter Mode Indication**

1/500	1/500 sec.
1/1000	1/1000 sec.

❽ **Manual White Balance Indication**

OUT	OUTDOOR
IN	INDOOR

- Some of the above indications may light up alternately at the same place in the EVF to indicate the corresponding operating condition or warning.

⓯ Eyepiece Corrector Control
⓰ Fade Button
⓱ Date/Time Selector
⓲ Camera Search (−)/Rec Review Button

Camera Search for checking
longer recorded scenes.

Rec Review for a quick check
of the end of a recorded scene.

Camera Search Function
In the recording pause mode, a recorded scene can be played back at high speed in reverse direction by keeping the Camera Search (−) Button pressed (sound is not reproduced). And it can then be played back at normal speed in forward direction by keeping the Camera Search (+) Button pressed.

When the button is released, the VHS Movie will return to recording pause mode.

Rec Review Function
Press the Rec Review Button whilst the VHS Movie is in the recording pause mode.
- The last 2 seconds of the recorded scene will be played back and the VHS Movie will again stop in the recording pause mode, ready for further recording.

⓳ Camera Search (+)/Button
⓴ Focus Mode Selector
㉑ Focus Adjusting Button/Zone Selector
㉒ White Balance Mode Selector
㉓ Index Signal Recording Button

Notes about Recording the Index Signal (VISS)
The recording of index signals at the beginning of and during recordings makes possible the use of the VHS Index Search or the Intro Scan function when playing back the tape on a VTR equipped with the VISS function.
An index signal is recorded when one of the following operations is performed.
- When recording is started for the first time after the VHS Movie is turned on.
- When recording is restarted after the cassette is exchanged or the tape is played back.
- When the Index Signal Recording Button is pressed during recording.

In each of these cases, the "INDEX" indication will flash for a few seconds in the EVF.
- When recording index signals, space the signals at least 2 minutes.

㉔ Timer/Interval Recording Button

■ **Pressing the Timer/Interval Recording Button repeatedly:**

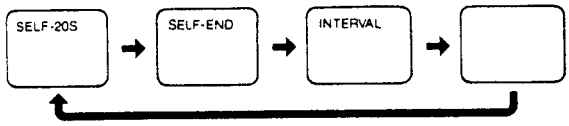

- Depending on the TV set used, the top of the picture may become distorted when playing back scenes shot with the interval recording function.

Self-Timer Recording

10 Seconds after the self-timer function is activated on the VHS Movie, the recording will start.
If the VHS Movie is mounted on a tripod, this handy function allows the person behind the camera to join the action that is being recorded.

❶ Press the Timer/Interval Recording Button during recording pause to select the desired recording mode.
- When the Timer/Interval Recording Button is pressed once, "SELF-20S" will appear in the EVF, and when the button is pressed twice, "SELF-END" will appear in the EVF.

❷ Press the Start/Stop Button and the self-timer recording will start 10 seconds later.
- When "SELF-20S" is indicated, the recording will be made for 20 seconds.
  When "SELF-END" is indicated, the recording will be made until the tape reaches its end.

To stop the Self-Timer Recording Midway

Press the Start/Stop Button, and the self-timer recording will be cancelled.

Interval Recording

This recording function automatically makes recordings of approx. 1 second duration at 1-minute intervals. (However, the initial recording will last for about 10 seconds.) The interval recording will continue for a maximum of 10 hours, after which the VHS Movie will turn itself off.

❶ Press the Timer/Interval Recording Button three times during recording pause mode.
❷ Press the Start/Stop Button.

To stop the Interval Recording Midway

Press the Start/Stop Button, and the interval recording will be cancelled.

㉕ High Speed Shutter Selector
㉖ Standby Button with Indicator

LEFT VIEW

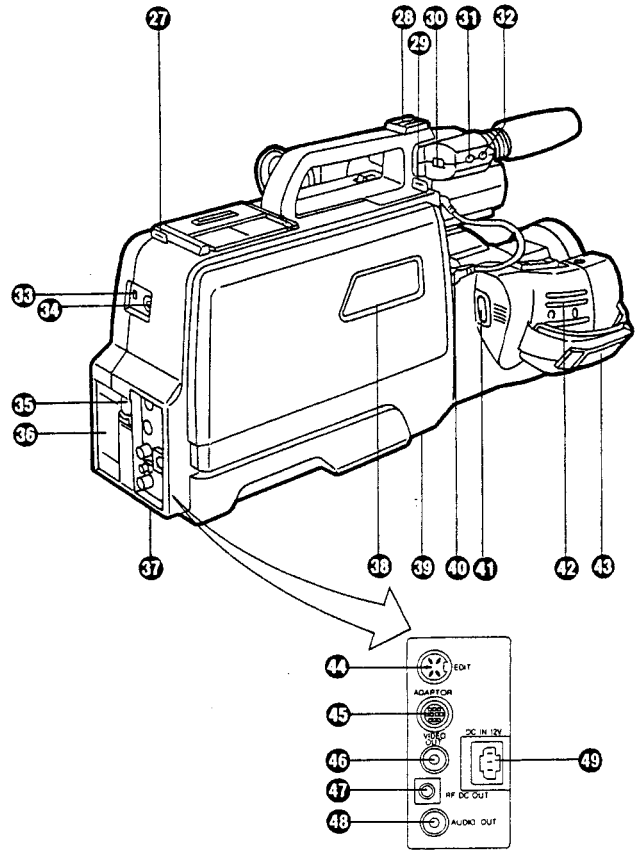

㉗ Metal Fitting for Shoulder Strap
㉘ Accessory Shoe
㉙ Metal Fitting for Shoulder Strap
㉚ Microphone Sensitivity Selector
㉛ Earphone Socket
㉜ External Microphone Socket
㉝ Edit Switch
㉞ Remote Control Socket
㉟ Battery Eject Button
㊱ Battery Compartment
㊲ Battery Compartment for Auto Date/Clock
㊳ Cassette Compartment
㊴ Tripod Receptacle
㊵ EVF/Character Generator Terminal
㊶ Start/Stop Button
㊷ Handgrip
㊸ Grip Belt
㊹ Edit Socket
㊺ Adaptor Socket
㊻ Video Output Socket
㊼ RF DC Output Socket
㊽ Audio Output Socket
㊾ DC Input Socket

1-2. VHS MOVIE SYSTEM ACCESSORIES

MEMO:

Standard Accessories

○ : Supplied
× : Not Supplied

	NV-M1000EN	NV-M1000EM
AC Adaptor	○	○
Battery Pack	○	○
Shoulder Strap	○	○
System Carrying Case	×	○
AV Output Cable	○	○
Battery Pack Charging Connector	○	○
Battery for Clock Operation	○	○
DC Input Cable	○	○
RF Adaptor	○	○

Optional Accessories

Line Adaptor (VW-KM10EN)

Pause Remote Contral Unit (VW-RM1)

System Carrying Case
(VW-SHM10EN: NV-M1000EN)

Character Generator (VW-CG2)

Shoulder Pad (VW-SP7)

Car Battery Cord (VW-ACM10EN/EM)

SECTION 2
ADJUSTMENT PROCEDURES

2-1. DISASSEMBLY PROCEDURES

2-1-1. DISASSEMBLY FLOW CHART

This flow chart indicates disassembly steps for the cabinet parts and the P.C boards in order to find the items necessary for servicing.
When reassembling perform the steps in the reverse order.

Note:

(1) When removing the cabinet, work with care so as not to break the locking tabs.
(2) Place a cloth or some other soft material under the P.C. boards or Unit to prevent damage.
(3) When re-installing, ensure that the connectors are connected and electrical components have not been damaged.
(4) Do not supply power to the Unit during disassembly.

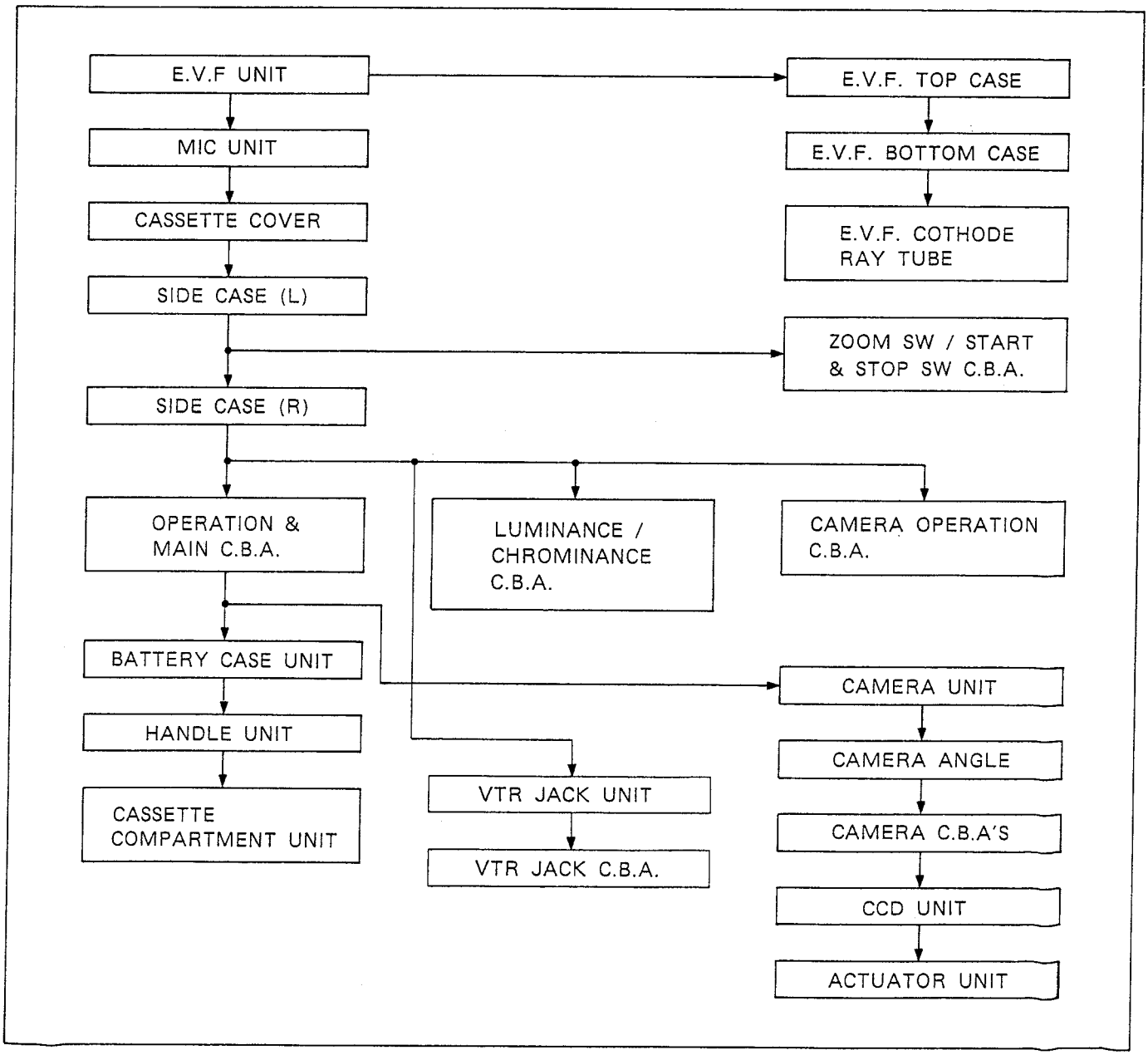

Fig. D1

2-1-2. DETAILED DISASSEMBLY METHOD

1. REMOVAL OF E.V.F. UNIT

(1) Remove the E.V.F. Unit connector.
(2) Slide the E.V.F. Unit in the direction shown by the arrow.
(3) Remove the E.V.F. Unit while pushing on the Locking Lever on the bottom of the Unit.

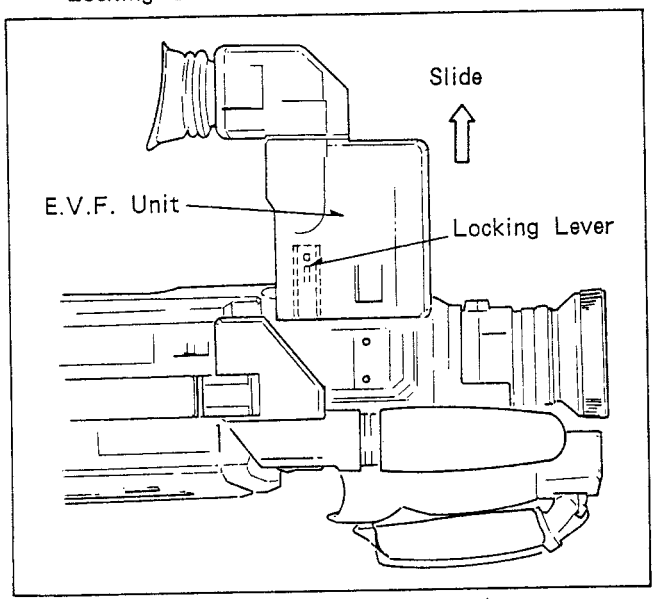

Fig. D2

2. REMOVAL OF MIC UNIT

(1) Remove 2 Screws (A) and (B).
(2) Slide the MIC Unit in the direction shown by the arrow.
(3) D isconnect the connector on the MIC Unit.

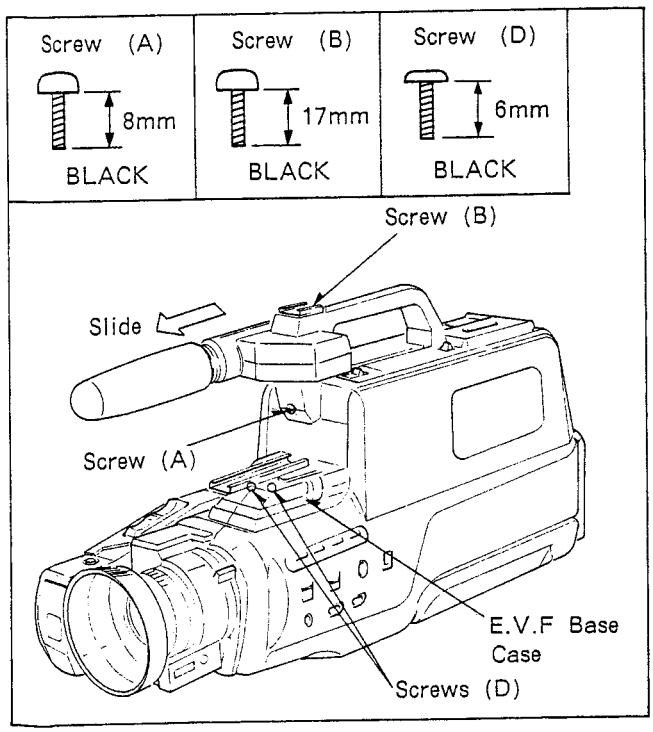

Fig. D3

3. REMOVAL OF CASSETTE COVER

(1) Remove 2 Screws (C).
(2) Pull the Cassette Cover straight up to remove.

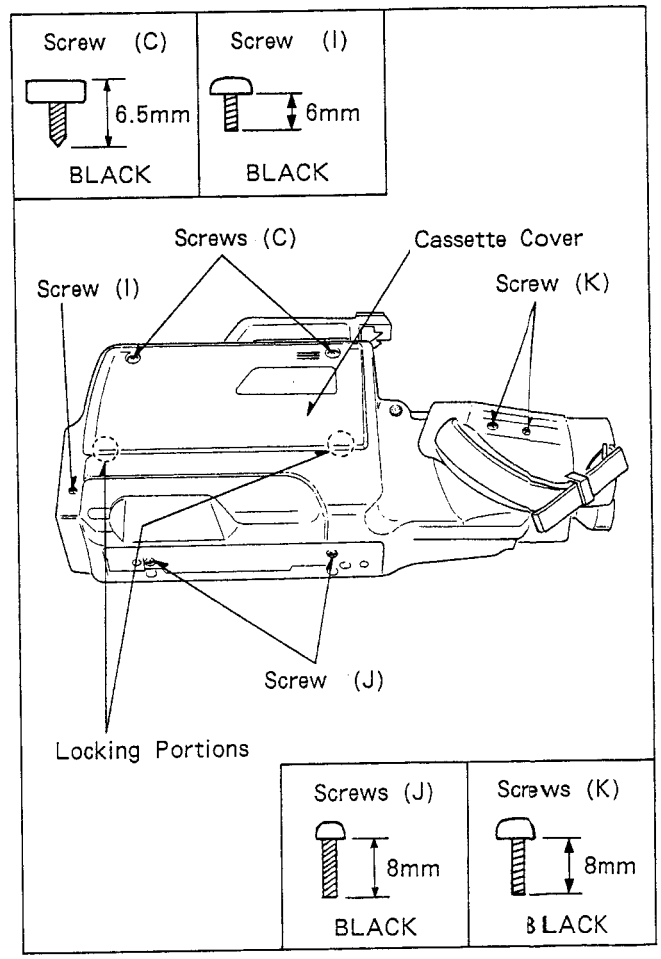

Fig. D4

Note:

Be carefull not to damage the Locking Portions when removing or realigning the Cassette Cover.

4. REMOVAL OF SIDE CASE (R) UNIT

(1) Remove 2 Screws (D) shown in Fig. D3.
(2) Remove the E.V.F. Base Case.
(3) Remove 2 Screws (E), 2 Screws (F), 2 Screws (G) and Screw (H).
(4) Lift the Side Case (R) Unit slightly. Then disconnect 4 Connectors on the Side Case (R) Unit.

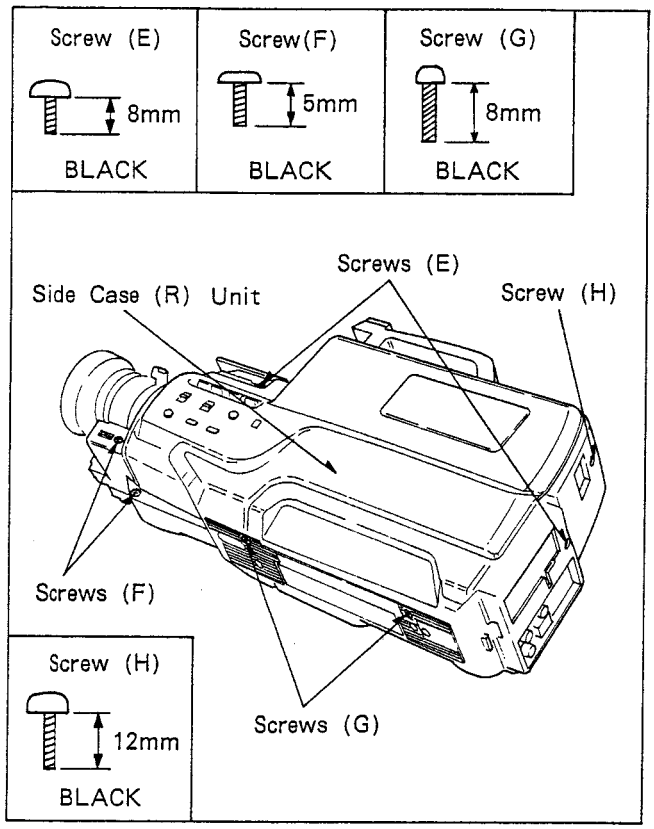

Fig. D5

5. REMOVAL OF SIDE CASE (L) UNIT

(1) Remove Screw (I), 2 Screws (J) and 2 Screws (K) shown in Fig. D4.
(2) Remove the Lens Hood and then remove Screw (L) shown in Fig. D6.
(3) Lift the Side Case (L) Unit slightly. Then disconnect the Connector.

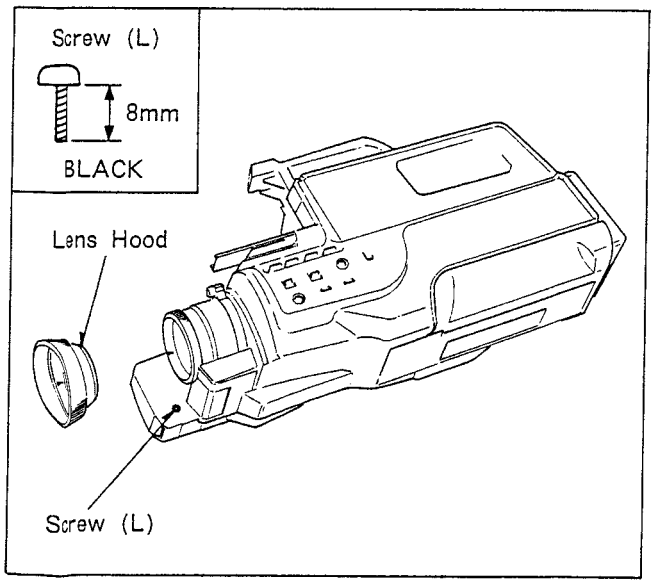

Fig. D6

6. REMOVAL OF OPERATION PANEL UNIT

(1) Unlock 4 Locking Tabs (M).
(2) Lift the Operation Panel Unit up slightly.

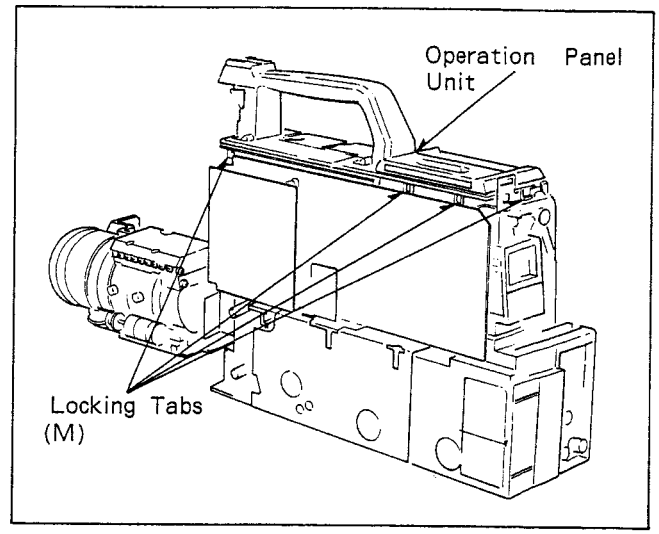

Fig. D7

7. OPENING OF OPERATION/MAIN C.B.A.

(1) Remove 2 Screws (N) and then unsnap 5 Locking Tabs (O).
(2) Open the Operation / Main C.B.A. slightly.
(3) Disconnect the Connector P6016 on Main C.B.A.

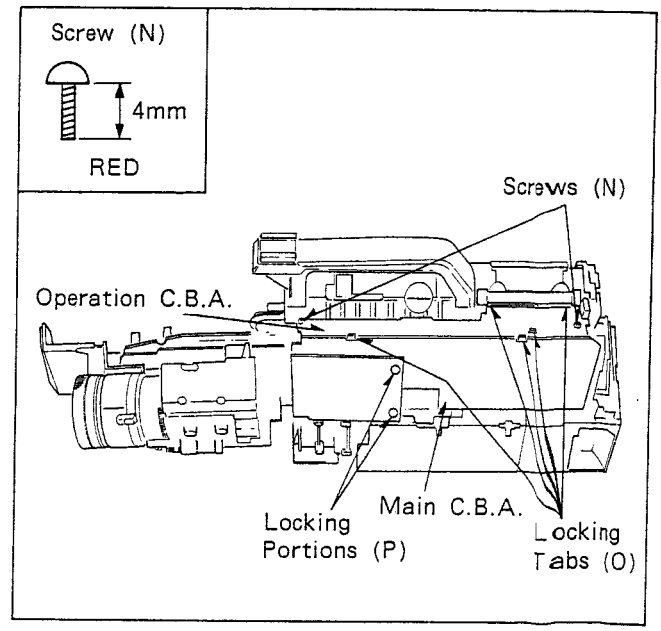

Fig. D8

8. OPENING OF LUMINANCE/CHROMINANCE C.B.A.

(1) Unlock the Locking Portions (P) shown in Fig. D8 and then open the Luminance / Chrominance C.B.A. slightly.

9. REMOVAL OF CAMERA OPERATION C.B.A.

(1) Remove 4 Screws (R) and 2 Screws (S).
(2) Unsnap 5 Locking Tabs (T) and then lift the Camera Operation C.B.A. up slightly.

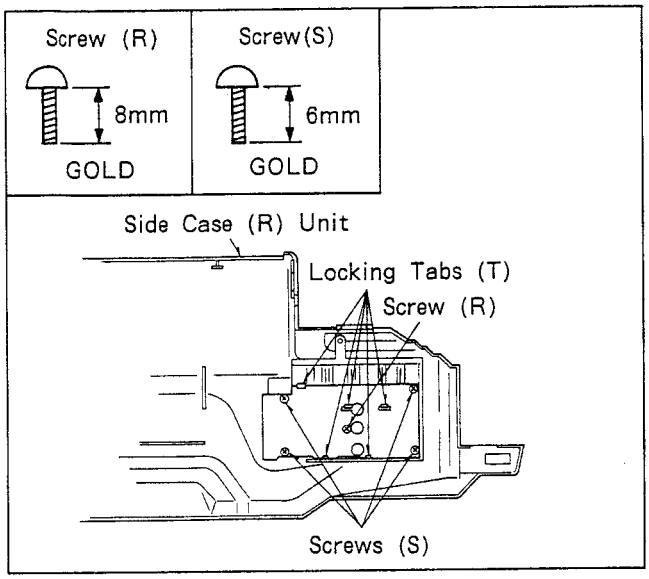

Fig. D9

10. REMOVAL OF START/STOP SW C.B.A. AND ZOOM SW C.B.A.

(1) Remove 2 Screws (U) and Screw (V).
(2) Unlock 4 Locking Portions (W) and then remove the Grip Unit slightly.

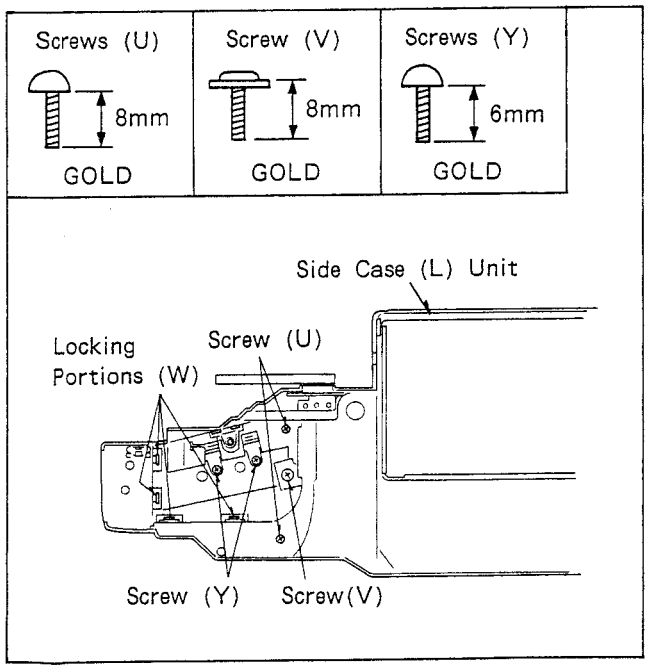

Fig. D10

(3) Unlock the Locking Portion (X) and then lift the Start/Stop SW C.B.A. up slightly.
(4) Remove 2 Screws (Y) shown in Fig. D10 and then remove the Zoom SW Unit.
(5) Unlock 2 Locking Portions (Z) and then lift the Zoom Button up slightly.
(6) Remove the Zoom SW C.B.A.

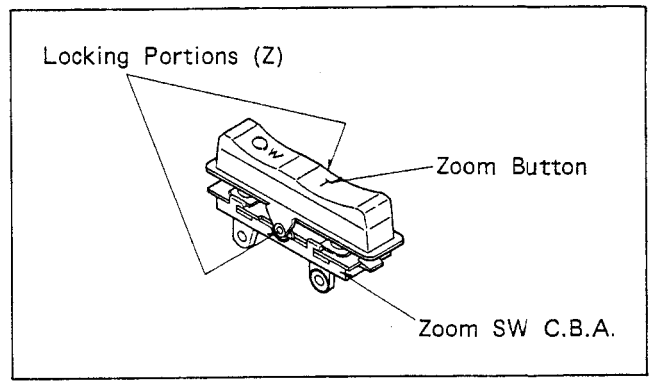

Fig. D11

11. OPENING OF BATTERY CASE UNIT

(1) Open the Operation/Main C.B.A. shown in Fig. D12.
(2) Remove 3 Screws (a) and 2 Screws (b). Then lift the Battery Case Unit slightly in order to release it from 2 Locking Pins (c).
(3) Loosen wires located around the Battery Case Unit.

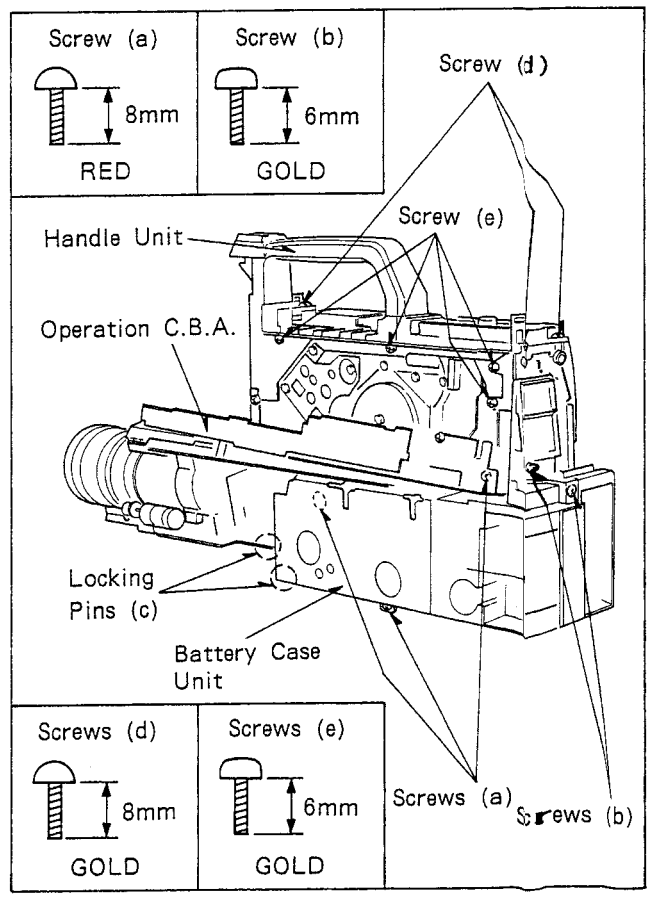

Fig. D12

12. REMOVAL OF HANDLE UNIT

(1) Remove 4 Screws (d) and 3 Screws (e) shown in Fig. D12.
(2) Remove the Handle Unit.

13. REMOVAL OF CASSETTE COMPARTMENT UNIT

(1) Remove 4 Screws (f) and then remove the Cassette Compartment Unit.

Note:

When re-installing the Cassette Compartment Unit, install it in the closed (cassette down) condition.

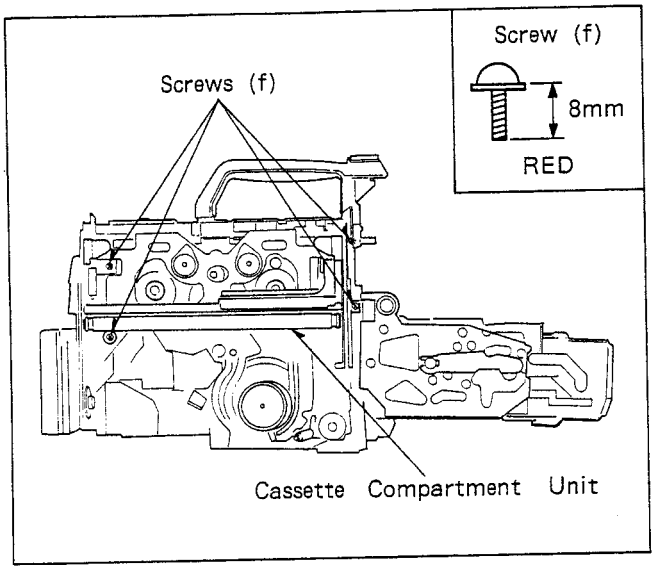

Fig. D13

14. REMOVAL OF CAMERA UNIT

(1) Remove 2 Screws (g).
(2) Disconnect the Connector P3804 and Flexible Connector P3802 on Main C.B.A.

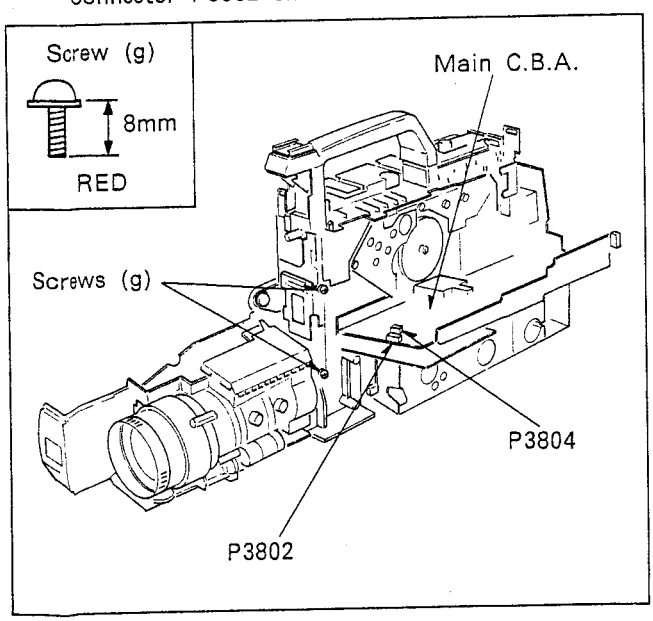

Fig. D14

15. REMOVAL OF CAMERA ANGLE

(1) Remove 2 Screws (h) and Screw (i).
(2) Remove the Camera Angle.

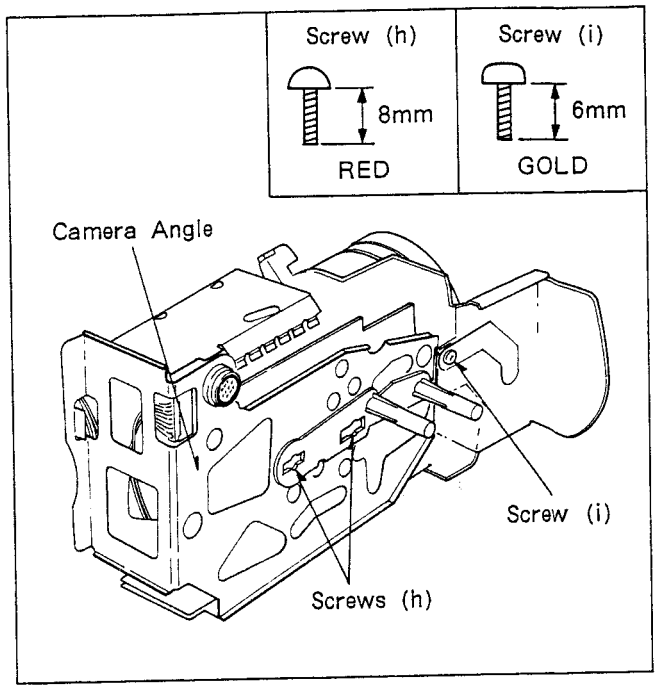

Fig. D15

16. REMOVAL OF AWT CASE UNIT

(1) Remove 2 Screws (j), Screw (k) and Screw (l).
(2) Remove the AWT Case Unit.

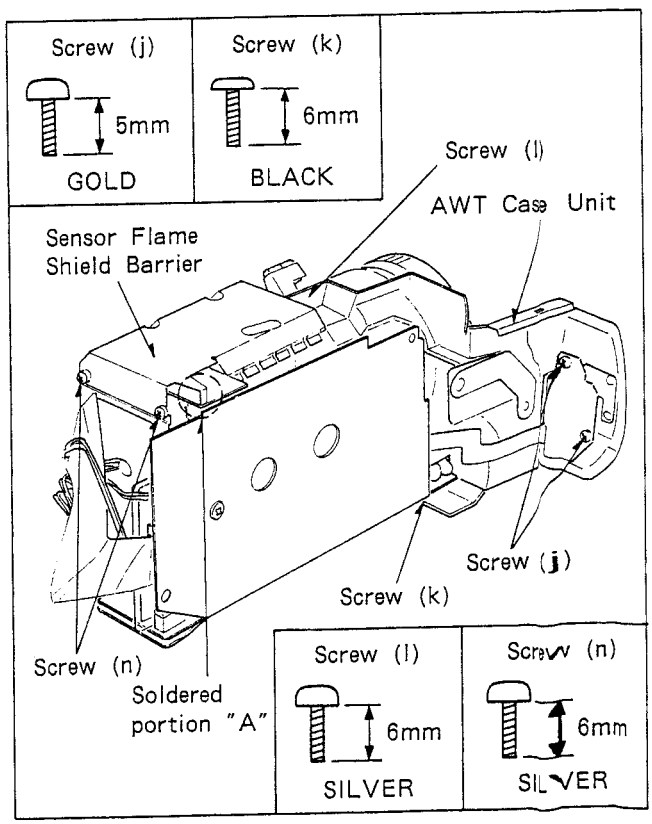

Fig. D16

17. REMOVAL OF CAMERA C.B.A.

(1) Remove 5 Screws (m) on Auto Focus and Process C.B.A's.
(2) Disconnect Connectors B301, B305.
(3) Lift the Process C.B.A. up slightly and then disconnect the flexible wire FP310 on Process C.B.A.
(4) Remove the Process C.B.A.
(5) Disconnect Connectors P701, P702, P704 and P705 on Auto Focus C.B.A.
(6) Remove the Auto Focus C.B.A.

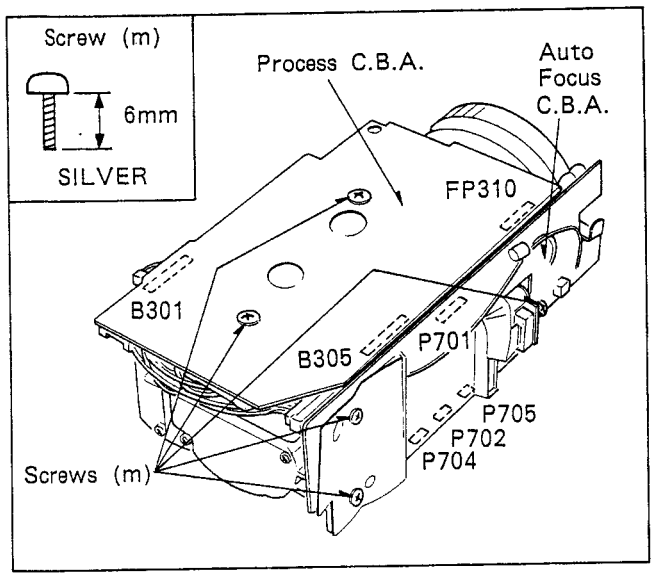

Fig. D17

18. REMOVAL OF SENSOR C.B.A.

(1) Remove 2 Screws (n) shown in Fig. D16 .
(2) Using soldering iron remove the solder from solder portion "A" , and then remove the sensor frame Shield Barrier.
(3) Remove 2 Screws (o).
(4) Lift the Sensor C.B.A. up slightly and then disconnect the Flexible Wire FP201 on Sensor C.B.A.

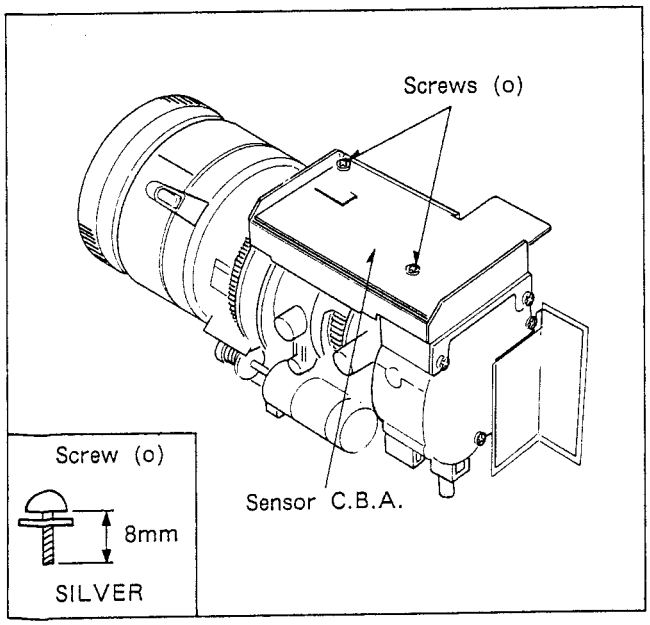

Fig. D18

19. REMOVAL OF CCD UNIT

(1) Remove 3 Screws (p) and Screw (g). And Then remove the Sensor C.B.A. Flame.
(2) Remove 2 Screws (r) and then remove the Sensor Flame.

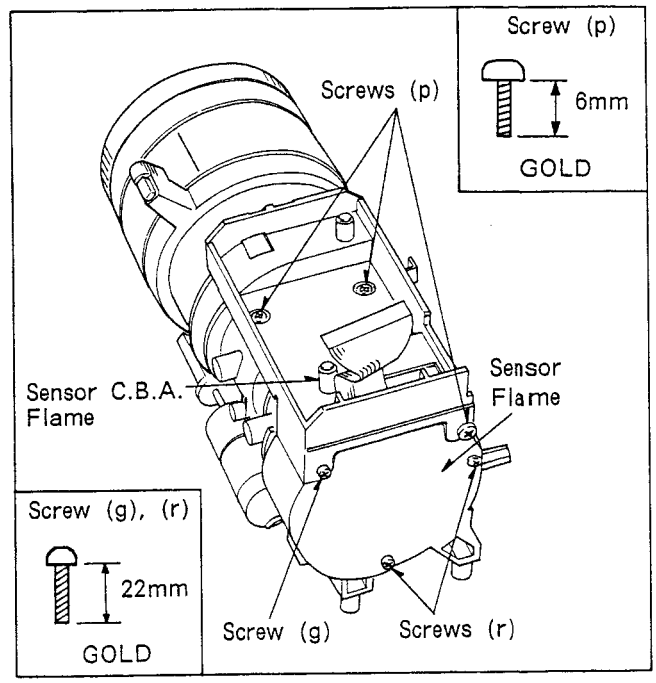

Fig. D19

(3) Remove 2 Screws (s) and then remove the CCD Unit.

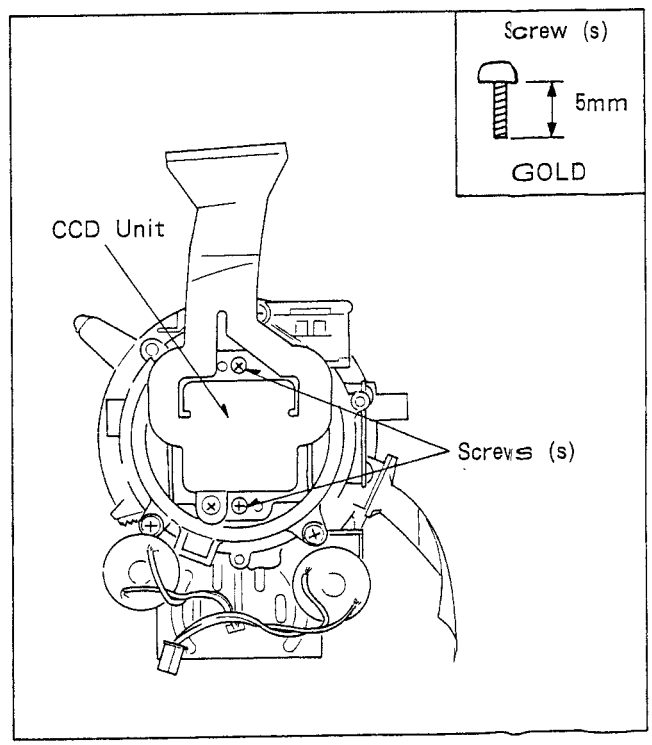

Fig. D20

20. REMOVAL OF ACTUATOR UNIT

(1) Remove 3 Screw (t) and then remove the Actuator Unit.

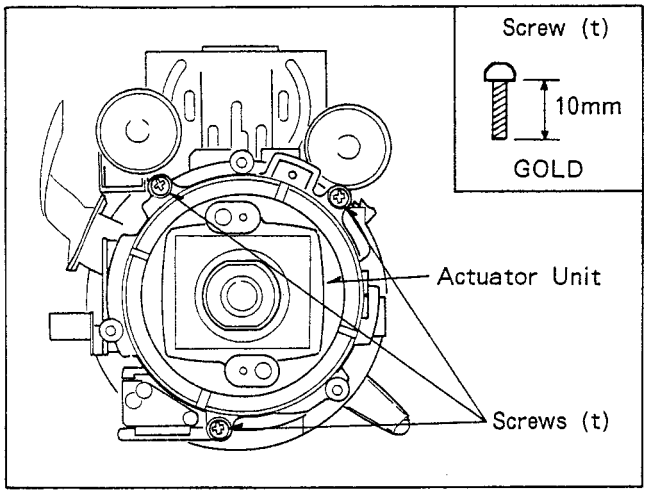

Fig. D21

21. DISASSEMBLY OF E.V.F. UNIT

(1) Remove 3 Screws (u) on the bottom of the E.V.F. Unit and then remove the Bottom Case.
(2) Remove CRT Top Case from CRT Bottom Case shown in Fig. D22.

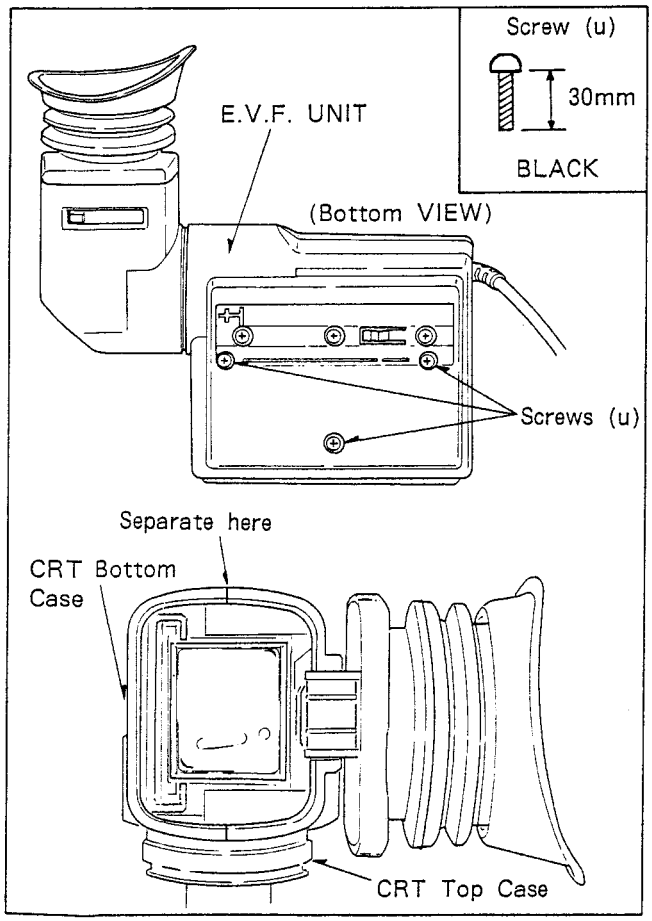

Fig. D22

(3) Lift the CRT Assembly up shown in Fig. D23.

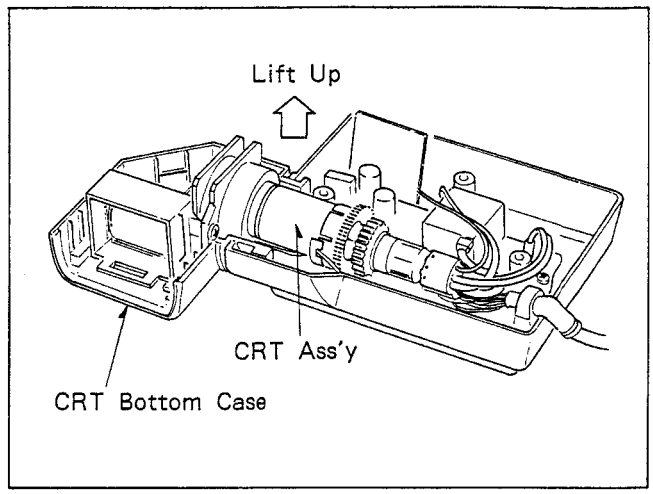

Fig. D23

(4) Rotate Nut (v) and then pull DY Assembly in the direction shown in Fig. D24 to remove it. Then the CRT can be replaced.
(5) For re-installation, reverse the above steps.

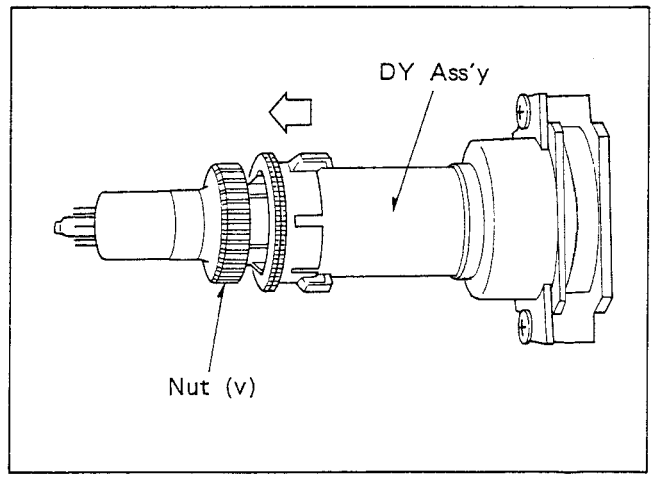

Fig. D24

22. REMOVAL OF VTR JACK UNIT

(1) Remove 2screws (w) show in Fig.D25.
(2) Disconnect Connectors P4901, P4901, P4904, P4906 and P4934 on VTR JACK UNIT.

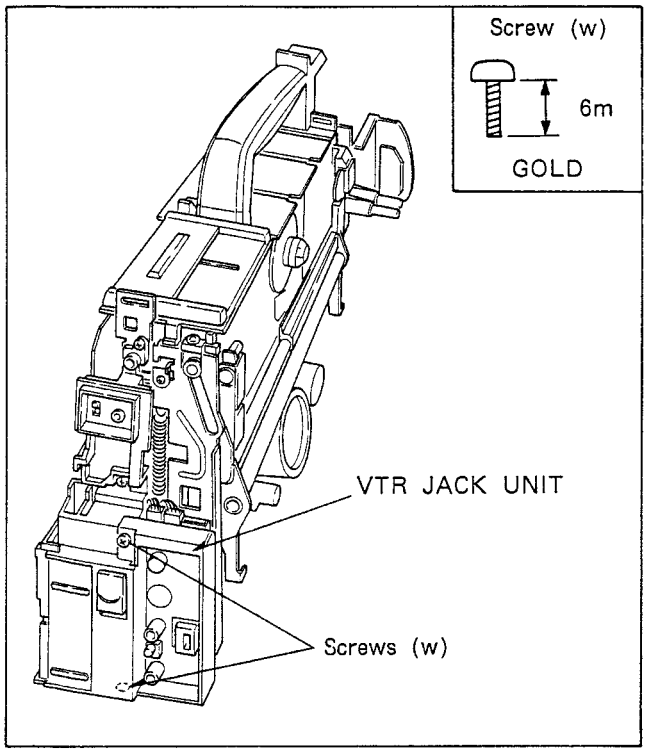

Fig. D25

23. REMOVAL OF VTR JACK C.B.A.

(1) Using Soldering Iron remove the solder from EDIT pins (5pins), ADAPTOR pins (10pins), VIDEO pins (2pins), RF DC OUT pins(3pins), AUDIO pins (2pins) and DC IN 12V pins (5pins) on the VTR JACK C.B.A.
(2) Remove 2 screws (x).
(3) Remove the VTR JACK C.B.A.

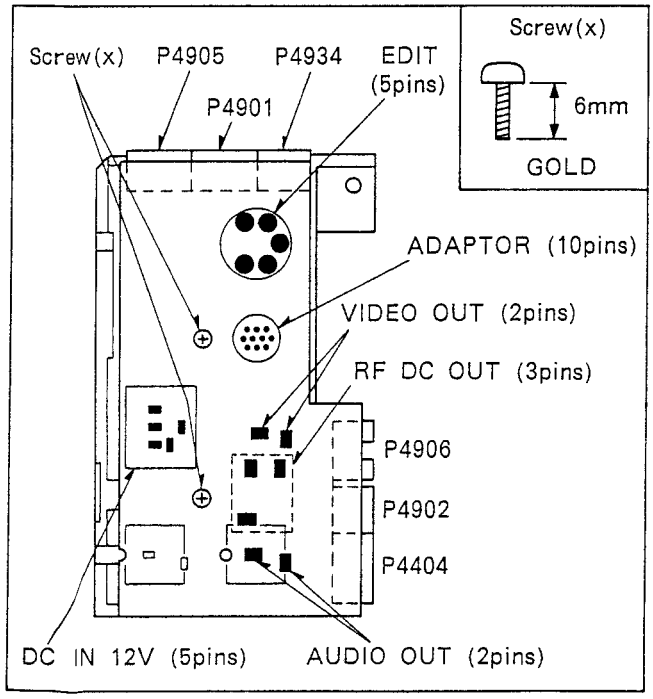

Fig. D26

2-2. REPLACEMENT PROCEDURES

2-2-1. REPLACEMENT OF CCD UNIT

(1) After removing of the CCD Unit install the new CCD Unit.
(2) Assemble the unit subject to the reverse steps of disassembly procedures.

NOTE :
(1) Do not touch the sureface of CCD Unit.
(2) Confirm the Whole adjustment procedures for Camera Section after replacing this CCD Unit.

2-2-2. REPLACEMENT OF ZOOM MOTOR UNIT

(1) Remove the Screw (A) and then remove the Zoom Motor Unit.
(2) Install the new Zoom Motor Unit.
Prior to this replacement, no dust around the Zoom Motor, especially around the gear unit should be confirmed.

2-2-3. REPLACEMENT OF FOCUS MOTOR UNIT

(1) Remove the Screw (B) and then remove the Focus Motor Unit.
(2) Install the new Focus Motor Unit.
Prior to this replacement, no dust around the Focus Motor Unit, especially around the gear should be confirmed.
(3) After this replacement, all the correct adjustments for all parts of auto-focus should be confirmed.

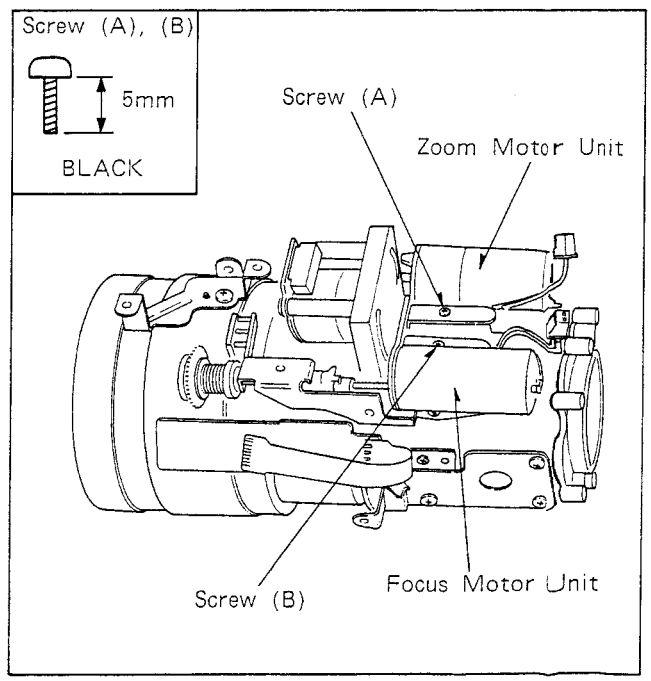

Fig. R1

2-2-4. REPLACEMENT OF CAPSTAN MOTOR UNIT

* Equipment required:
  Reel Table Height Gauge (VFK0190)
* Specification...0.5+−0.05mm

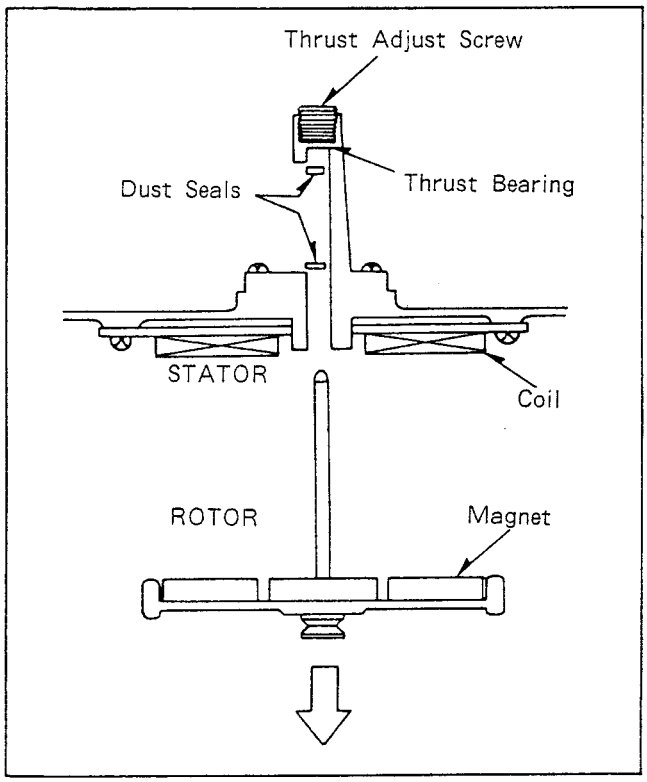

Fig. R2

(1) Remove the 2 screws and take belt cover off. After that remove the capstan belt.
(2) Tighten the Thrust Adjust Screw fully and pull the capstan rotor.

Note :

In this time pay attention not to lose two pieces of Dust Seal.

(3) Replace the new rotor with two pieces of Dust Seal.

Note :

(1) Pay attention to the replaced new rotor not to shock because of magnet absorbtion.
So hold the rotor firmly and replace it carefully.
(2) In this replacement, do not touch the Capstan shaft with any hard material like drivers or tweezers.

(4) After replacement, wipe off the Capstan shaft to remove oil, grease or dust.
(5) Unscrew Thrust Adjust Screw till the rotor is just touching to the stator.
(6) Turn this mechanism upside down and place the Reel Table Height Gauge so that the gauge fits to the chassis correctly, and read the height.
(7) Adjust the Thrust Adjust Screw so that the height difference just meets in the specification (0.5+−0.005mm) reading the height from the gauge.

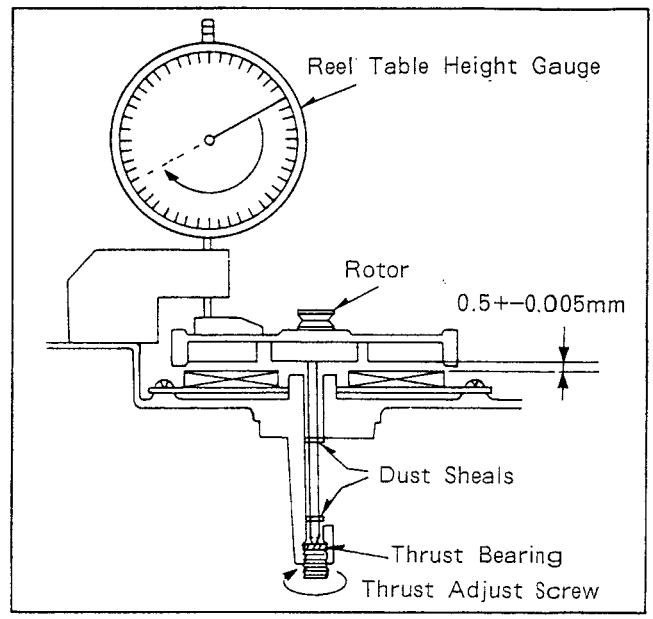

Fig. R3

Note:

If the Thrust Adjust Screw is fully opened, you have to pay attention not to lose Thrust Bearing.
When it is fixed, confirm that the direction of Thrust Bearing is correct as shown below.

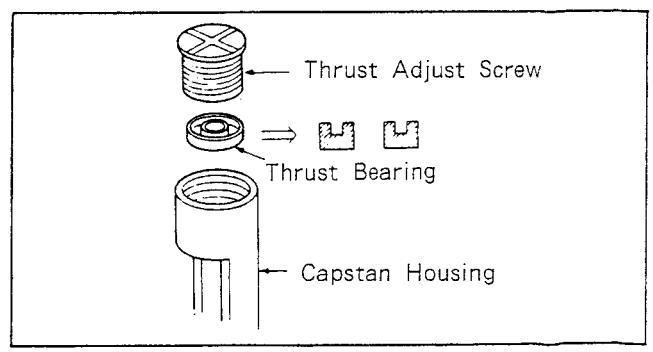

Fig. R4

2-2-5. REPLACEMENT OF TENSION BAND

(1) Remove the cassette compartment.
(2) Remove a retaining ring and take out a Rew Arm (A) Unit.
(3) Remove a retaining ring and a snap washer and take out a tension Band Unit.

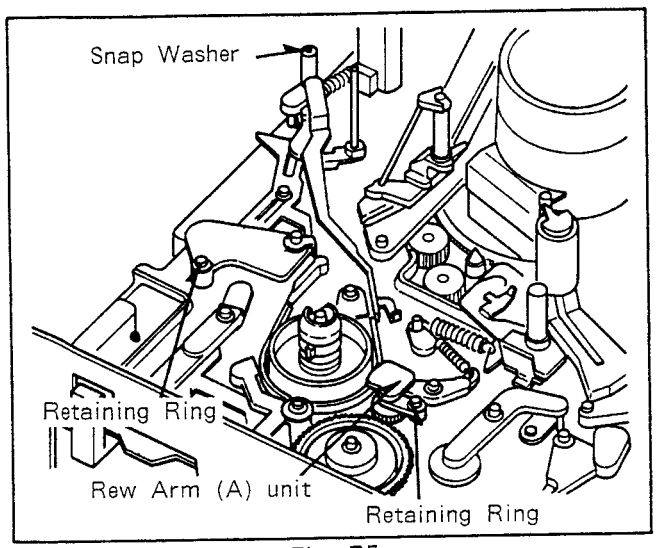

Fig. R5

(4) Remove a Tension Band from Band Release Arm and Tension Arm Unit.

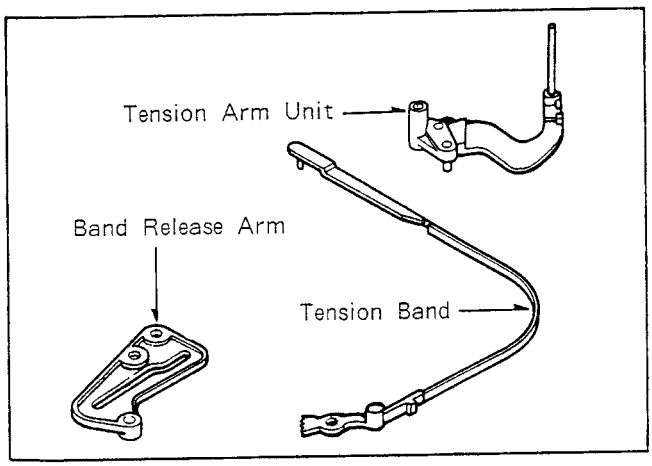

Fig.R6

(5) Replace a new Tension Band by Proceeding reverse steps shown above.

2-3. MECHANICAL ADJUSTMENT PROCEDURES

1. SERVICING FIXTURES & TOOLS

VFK0326 Hex Wrench Set (0.7, 0.9, 1.2, 1.5, 1.6, 2, 2.4, 3mm)	VFJ8125H3F VHS Alignment Tape	VFK0335 Retaining Ring Remover (3mm/4mm)
VFK0191 Post Adjustment Plate	VFK0190 Reel Table Height Gauge	VFK0328 H-Position Adj. Fixture
VFK0329 Post Adjustment Screwdriver	VFK0157 Fine Adjustment Screwdriver Approx. 2.5mm. Grind the top portion approximately 2.5mm	VFK0133 Dial Torque Gauge VFK0134 Adaptor for VFK0133 VFK0180 (Plastic Clamper Only))
VFK0343 Check Light	VFK0132 Back Tension Meter (TZ-H7-UM) (Tentelometer, Made in U.S.A.)	VKF27 Head Cleaning Stick
MOR265 Morlytone Grease	High Quality Machine Oil <Purchase Locally> (Reel Shaft, Capstan Shaft etc.) Cleaning Liquid (Freon, TF, Alchol) <Purchase Locally> (Tape Transport Rubber Parts etc.)	

2. PROCEDURES FOR CLEANING OF UPPER CYLINDER UNIT

(1) Position the video head to clean and hold the upper cylinder to keep it from turning while cleaning.
(2) Gently rub the video head in direction of tape travel whith Head Cleaning Stick.
(3) Repeat for the other three video heads.

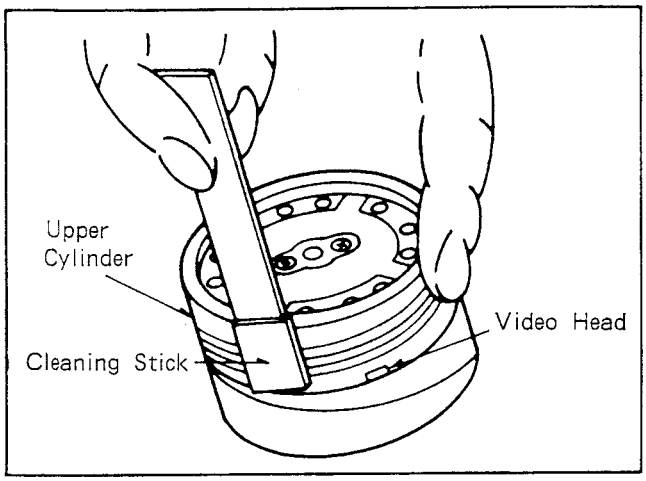

Fig. U1

Note:
(1) Do not rub vertically.
(2) Do not apply any pressure to heads.
If contamination is not easily removed,continued gentle wiping will usually remove the substance.

3. TAPE INTERCHANGEABILITY ADJUSTMENT PROCEDURES

3-1. ADJUSTMENT FLOW CHART

This flow chart describes the order of steps for adjusting the tape guide posts and A/C head in order to gain access to the items needing servicing.

AFTER REINSTALLING THE P1 POST, OR IF THE P1 POST HAS BEEN TURNED EXCESSIVELY.

↓

3-2-1. COARSE ADJUSTMENT OF THE TAPE GUIDE POST HEIGHTS.

* **Note:**
Adjust the tape guide post P1 only.

↓

3-2-2. CONFIRMATION OF THE TAPE TRANSPORT.

↓

3-2-5. CONFIRMATION OF THE ENVELOPE OUTPUT (LINEARITY).

AFTER REINSTALLING THE UPPER CYLINDER OR CYLINDER UNIT.

↓

3-2-5. CONFIRMATION OF THE ENVELOPE OUTPUT.

↓

3-2-9. FINE ADJUSTMENT OF THE A/C HEAD HORIZONTAL POSITION (X-VALUE).

* **Note:**
Do not change the height of the P1 and P4 posts and position of the A/C head.

AFTER REINSTALLING ALL POSTS OR IF ALL POSTS HAVE BEEN TURNED EXTREMELY.

↓

3-2-1. COARSE ADJUSTMENT OF THE TAPE GUIDE POST HEIGHTS.

↓

3-2-2. CONFIRMATION OF THE TAPE TRANSPORT.

↓

3-2-3. ADJUSTMENT OF THE PULL-OUT POST (P5 POST) HEIGHT.

↓

3-2-4. CONFIRMATION OF THE A/C HEAD TILT.

↓

3-2-5. CONFIRMATION OF THE ENVELOPE OUTPUT.

AFTER REINSTALLING THE A/C HEAD.

↓

3-2-4. CONFIRMATION OF THE A/C HEAD TILT.

* **Note:**
Do not change the height of P4 post.

↓

3-2-6. COARSE ADJUSTMENT OF THE A/C HEAD HEIGHT.

↓

3-2-7. ADJUSTMENT OF THE A/C HEAD HEIGHT AND AZIMUTH.

↓

3-2-8. COARSE ADJUSTMENT OF THE A/C HEAD HORIZONTAL POSITION (X-VALUE).

↓

3-2-9. FINE ADJUSTMENT OF THE A/C HEAD HORIZONTAL POSITION (X-VALUE).

AFTER REINSTALLING THE P4 POST, OR IF THE P4 POST HAS BEEN TURNED EXCESSIVELY.

↓

3-2-1. COARSE ADJUSTMENT OF THE TAPE GUIDE POST HEIGHTS.

↓ * **Note:** Adjust the P4 post only.

3-2-2. CONFIRMATION OF THE TAPE TRANSPORT.

↓ * **Note:** Adjust the P4 post only.

3-2-4. CONFIRMATION OF THE A/C HEAD TILT.

↓

3-2-5. CONFIRMATION OF THE ENVELOPE OUTPUT (LINEARITY).

AFTER REINSTALLING THE PULL-OUT POST (P5 POST).

↓

3-2-3. ADJUSTMENT OF THE PULL-OUT POST (P5 POST).

* **Note:**
Do not readjust any other post.

3-2. ADJUSTMENT PROCEDURES

3-2-1. COARSE ADJUSTMENT OF THE TAPE GUIDE POST HEIGHT (P1, P2, P3 AND P4)

* Equipment Required:
  Post Adjustment Plate.....VFK0191
  Reel Table Height Gauge.....VFK0190
  Nut Driver (Purchase locally)
  Post Adjustment Screwdriver.....VFK0329

1. Remove the cassette compartment from the mechanical chassis.
2. Place the Post Adjustment Plate over the reel tables.
   (Fig. M1)
   Confirm that the Post Adjustment Plate is firmly seated.

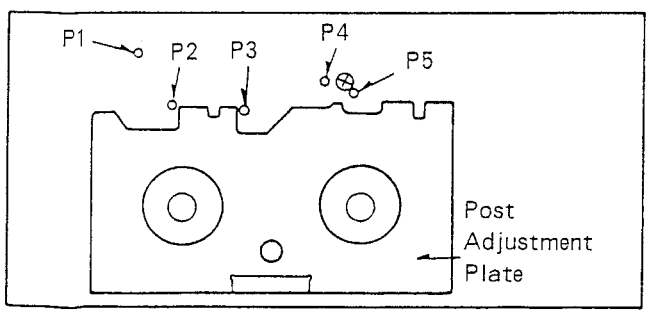

Fig. M1

3. Lower all 4 tape guide posts so that the lower tape guide on each post is below the top surface of the adjustment plate.
   Use the post Adjustment screwdriver to lower posts P2 and P3, and the Nut Driver to lower Posts P1, P4 and P5.
4. Place the Reel Table Height Gauge on the Post Adjustment Plate and lower the scraper so that it touches the plate (Fig. M2).

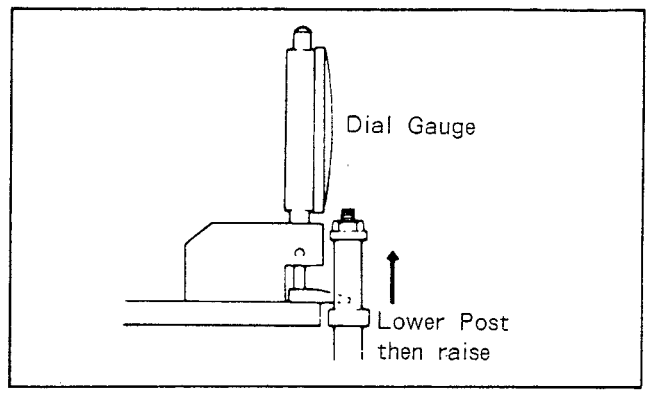

Fig. M2

5. Place the side of the scraper against the each post as shown in Figure M3, set the gauge to zero, then slowly raise the post until the lower tape guide just touches the bottom of the scraper. Use the gauge to determine the exact point at which the lower tape guide touches the scraper. (Fig. M3)

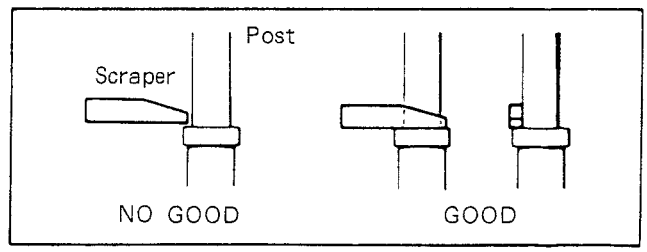

Fig. M3

3-2-2. CONFIRMATION OF THE TAPE TRANSPORT (TAPE GUIDE POSTS)

* Note:

1. The tape guide posts have been precisely adjusted at the factory. Therefore, normally do not change the height of P1, P4 and P5 posts. The following adjustment is required only when replacing the posts.
2. If curling is apparent proceed to the P4 post, wipe dirt from the pressure roller and capatan shaft using a soft cloth impregnated with Freon TF or cleaning liquid.
3. The adjustment of the post height is required only the one which has been replaced.

* Equipment Required
  Post Adjustment Screwdriver.....VFK0329
  Check Light.....VFK0343
  Nut Driver (Purchase locally)

1. To prevent the alignment tape from being damaged, use a normal cassette tape for this procedure.
   Playback the normal cassette tape and confirm that the tape travels without any curling at the edges of all the posts by using the check light. (Fig. M4 and Fig. M5)

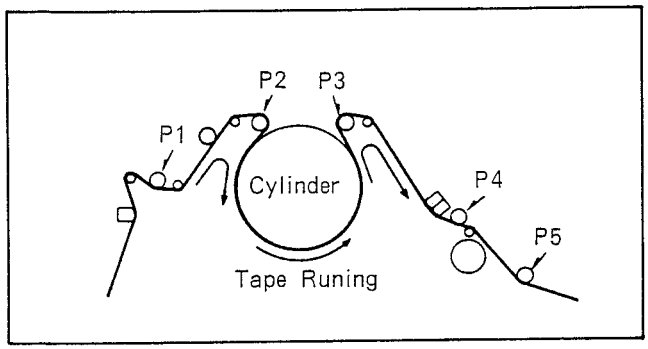

Fig. M4 Tape Transport Posts

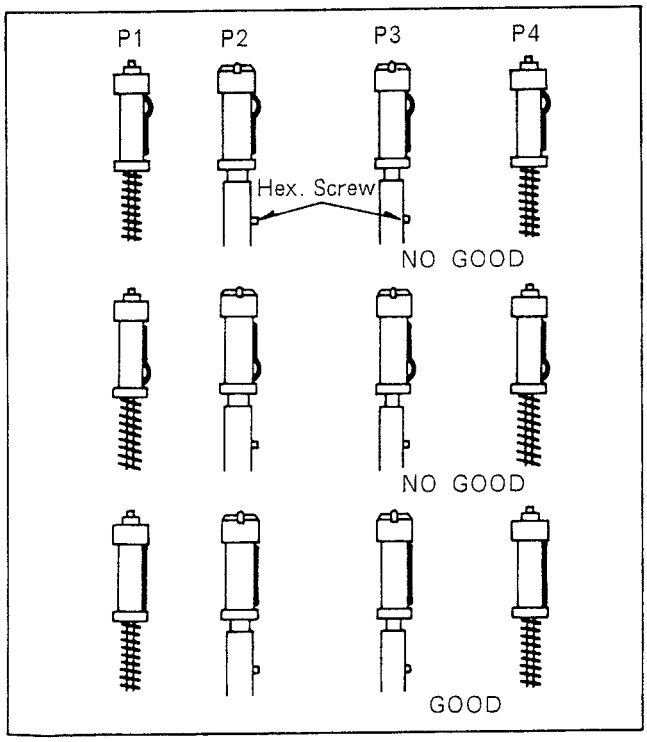

Fig. M5 Tape Guide Posts

2. If curling is apparent, adjust the height of posts by turning the top of post with the post adjustment screwdriver (posts P2 and P3) or the nut-driver (Posts P1 and P4). (Fig. M4 and M5)
3. After adjusting the P4 post, adjustment of the pull-out post (P5) is required.
   (Refer to "ADJUSTMENT OF THE PULL-OUT POST HEIGHT".)
4. If the tape curling cannot be corrected by adjusting the tape guide posts, then adjustment of the A/C head tilt may be needed.

3-2-3. ADJUSTMENT OF THE PULL-OUT POST (P5 POST) HEIGHT

* Notes:
  1. This adjustment should be performed only after adjusting tape guide post P4 as the height of the pull-out post is based on the height of post P4.
  * Tools and Equipment Required:
    Post Adjustment Plate.....VFK0191
    Reel Table Height Gauge.....VFK0190
    Check Light.....VFK0343
    Nut Driver (Purchase locally)

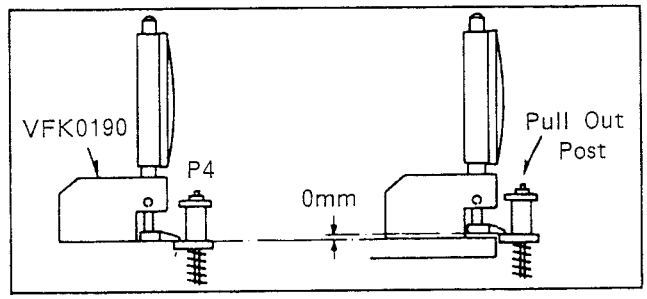

Fig. M6

1. Remove the cassette compartment by unscrewing 4 screws. Unit.
2. Place the Post Adjustment plate over the reel tables.
3. Place the Reel Table Height Gauge on the tape guide post P4, lower the scraper so that it touches the lower edges of P4, then set the gauge to zero ("0"). (Fig. M6)
4. Slightly lower the pull-out post by turning the nut on the post clockwise with the nut driver, and set the side of the scraper against the post as shown in Fig. M7.
5. Slowly turn the nut on the post counterclockwise until the gauge reads 0mm. (Fig. M6)
6. Confirm there is no tape curling at P4 post during reverse mode by using the check light.
   If tape curling occurs, back to step 3.

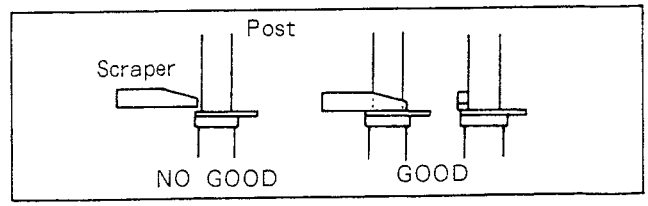

Fig. M7 Post Adjustment

3-2-4. CONFIRMATION OF THE A/C HEAD TILT

* Note:
This procedure should be performed after replacing the A/C head and pressure roller, and adjusting the height of the tape guide post (P4).
(Refer to "COARSE ADJUSTMENT OF THE TAPE GUIDE POST HEIGHTS".)

  * Tools and Eqipment Required:
    Hex. Wrench Set.....VFK0326
    Nut Driver (purchase locally)

1. Play back the begnning portion of NV-E240 blank cassette tape and confirm that the tape runs between lower and upper limiters of the P4 post. If there is waving or frilling in the lower edge or top edge of the tape, correct the tilt of the A/C head by turning the screw located behind the A/C head. (Fig. M8)

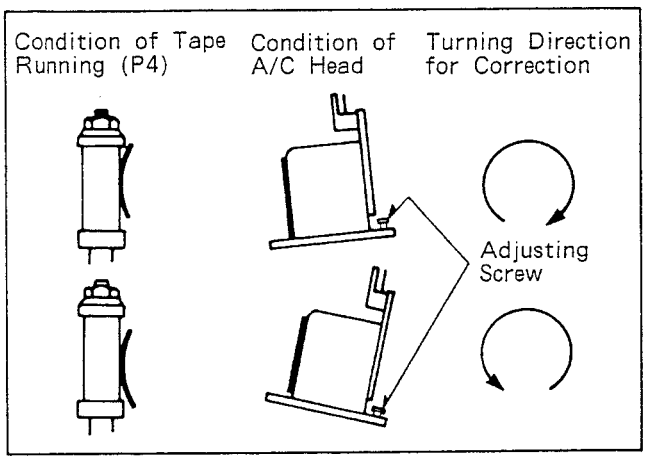

Fig. M8

2. If the tape curling cannot be acomplished by adjusting the A/C head tilt, then readjustment of the height of the tape guide post (P4) may be needed.

* Notes:

1. The tape guide post (P4) has been precisely adjusted at the factory. Therefore, normally the tape guide post (P4) readjustment is not required to eliminate the tape curling.
2. After adjusting the A/C head tilt, the A/C head height adjustment is required.

3-2-5. CONFIRMATION OF THE ENVELOPE OUTPUT (LINEARITY)

* Note:

Before playing back the alignment tape, play back a normal cassette tape and confirm correct transport.
(Refer to "CONFIRMATION OF THE TAPE TRANSPORT".)

* Tools and Equipment Required:
Post Adjustment Screwdriver.....VFK0329
Alignment Tape.....VFJ8125H3F

1. Connect the scope to the output of the Head Amp (TP3001) on the Main C.B.A. and TP2001 on the same C.B.A. to EX +- Trigger of the scope.
2. Play back the monoscope portion of the alignment tape VFJ8125H3F.
3. Turn the Tracking Control VR and adjust for maximum RF envelope.
4. If the RF envelope appears like example "A" or "B" in Fig. M9, then adjustment of tape gulde post (P2 : Entrance) is necessary.
5. Adjust the tape guide post (P2) with the post adjustment screwdriver so that the RF envelope waveform at the entrance portion becomes flat as shown "C" in Fig. M9. (See Fig. M12 also)

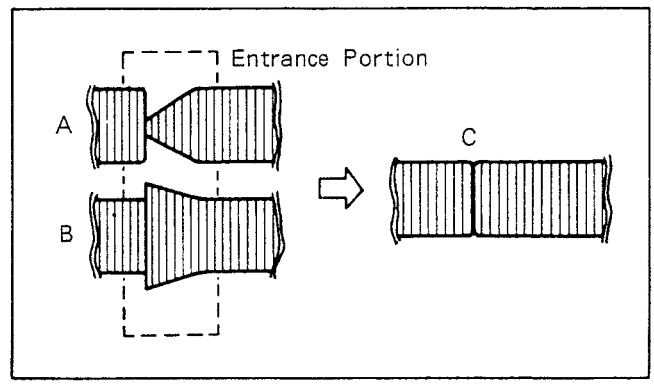

Fig. M9

6. If the RF envelope appears like example "D" or "E" in Fig. M10, then adjustment of the tape guide post (P3 : Exit) is necessary.
7. Adjust the tape guide post (P3) in the same manner as the P2 post so that the exit portion becomes flat as shown in "F" in Fig. M10.

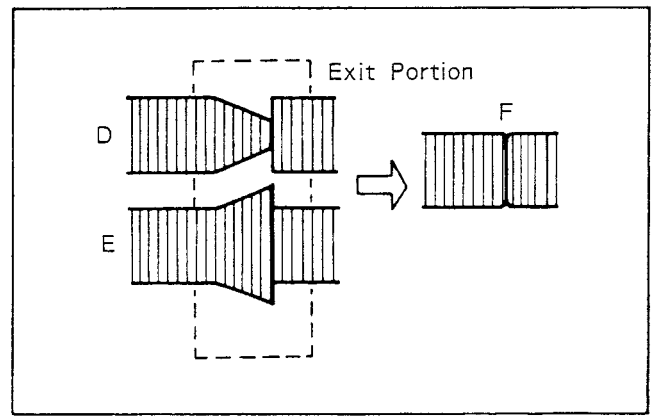

Fig. M10

8. Turn the Tracking VR from end to end.
The variation of RF envelope should be nearly parallel as shown in Figure M11.
9. Turn the Tracking VR and adjust for maximum RF envelope.
If the RF envelope does not meet these specs, V1/V 0.7, V2/V 0.8, then repeat steps 1-9 of item 3-2-5. again. (Fig. M13)

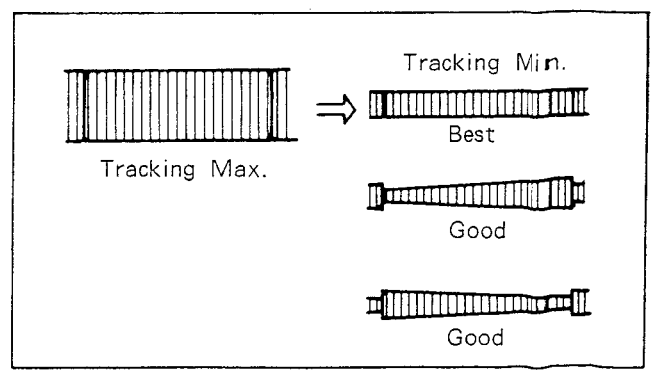

Fig. M11

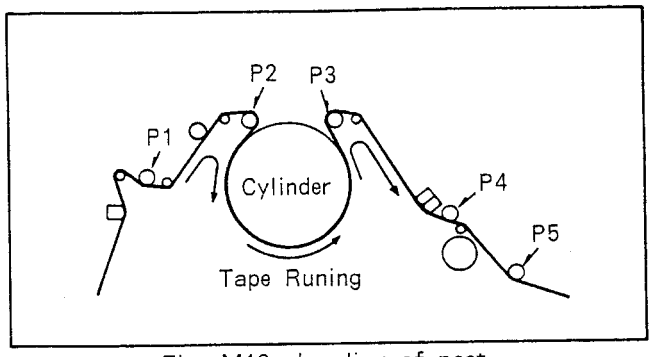

Fig. M12 Loading of post

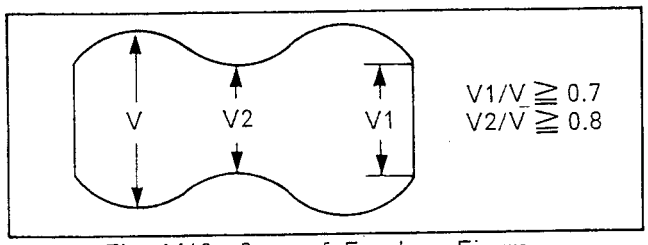

Fig. M13 Spec. of Envelope Figure

10. Turn the Tracking VR from end to end again and then back to the detent (Fix) position.
    At the detent position, the RF envelope waveform should be at maximum. If it is not at maximum then "ADJUSTMENT OF THE A/C HEAD HORIZONTAL POSITION" is necessary.
    (Refer to "FINE ADJUSTMENT OF THE A/C HEAD HORIZONTAL POSITION".)

3-2-6. COARSE ADJUSTMENT OF THE A/C/ HEAD HEIGHT

* Note:
This procedure should be performed only when the A/C Head is replaced.

* Tools and Equipment Required:
Check Light.....VFK0343
Nut Driver (Purchase locally)

(1) Looking at the lower edge of the control head within the tape running, ensure that lower edge of the tape runs along 0.25mm far from lower edge of the control head. (litte bit up position from lower edge of control head.) If it doesn't, slightly turn the nut (A) in either direction to correct clockwise to lower the head and counterclockwise to raise it.

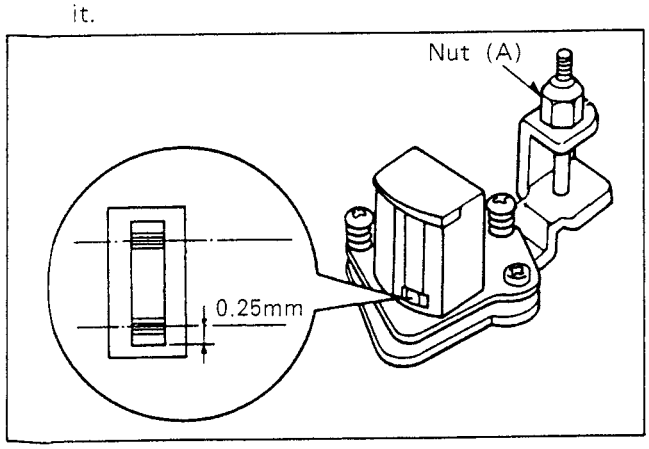

Fig. M14

3-2-7. ADJUSTMENT OF THE A/C HEAD AND AZIMUTH

* Note:
This procedure should be performed only when the A/C Head is replaced and posts hight are readjusted.

* Tools and Equipment Required:
Nut Driver (Purchase locally)
Alignment Tape.....VFJ8125H3F

1. Connect the scope to the audio output. (TP4001)
2. Play back the 2nd portion (Normal Audio 6KHz) of the alignment tape, VFJ8125H3F.
3. Adjust the screw (B) so that the audio output level at TP4001 becomes maximum. (Fig. M15)

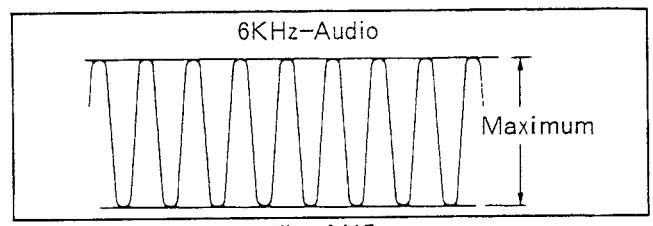

Fig. M15

4. Then adjust the nut (A) so that the audio output level (at TP4001) maximum.

3-2-8. ADJUSTMENT OF A/C HEAD HORIZONTAL POSITION

Note:
This procedure should be performed only when the A/C head is replaced and after performing the tape interchangeability adjustment.

* Tools and Equipment Required:
H. Position Adj. Fixture.....VFK0328
Alignment Tape.....VFJ8125H3F

1. Set the Tracking Control VR to the center detent (fixed) position.
2. Connect the scope CH1 to TP3001 on the Main C.B.A., and TP4001 on the Audio C.B.A. to Ext-trigger the scope.
3. Play back the Monoscope patern of the alignment tape (VFM8125H3F).
4. Adjust the adjust screw so that the RF envelope output level becomes maximum at the detent position (Fig. M16, M17).
5. Turn the Tracking VR from end to end and then back to the detent position.
   Confirm that the RF envelope output level is maximized at the detent position. (Fig. M11)

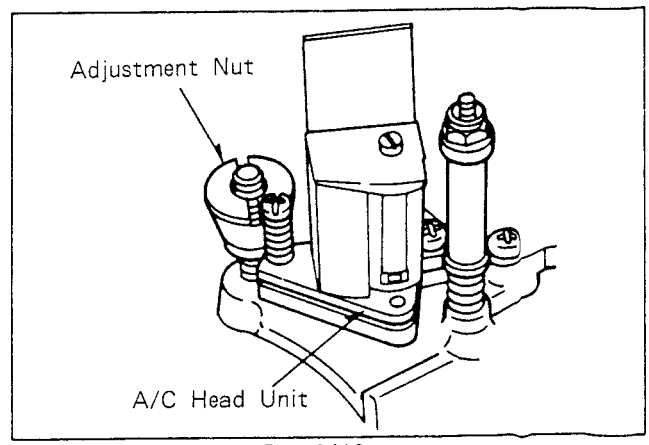

Fig. M16

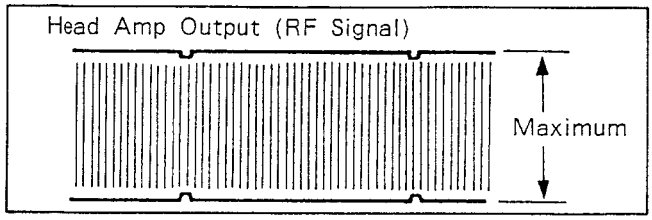

Fig. M17

4. OTHER ADJUSTMENT PROCEDURES

4-1. CONFIRMATION OF BRAKE TORQUE

* Equipment Required:
  Dial Torque Gauge.....VFK0133
  Adaptor for Gauge.....VFK0134
* Specification: -----see spec table (Fig. M19).

(1) Remove the cassette compartment by unscrewing 4 screws.
(2) Attach the adaptor to the torque gauge and place the unit in STOP mode.
(3) Place the torque on the reel table. The weight of gauge should not rest on the reel table.

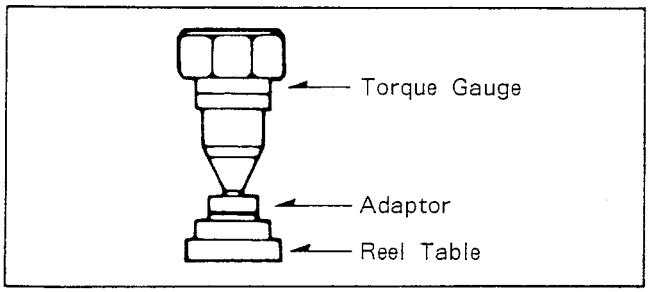

Fig. M18

(4) Turn torque gauge in either direction indicated in the Fig. M19, and read the gauge when the brake begins slipping.

Note:

If proper brake torque can not be optained, check the both take-up and supply clutch gear.

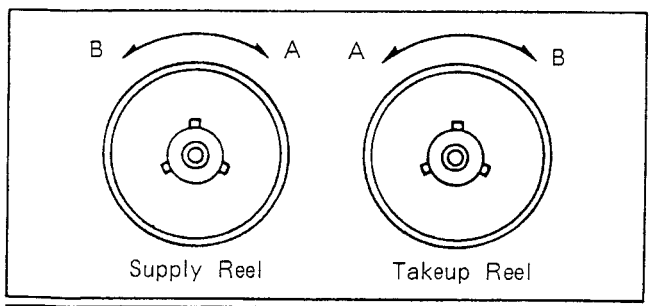

	A	B
Takeup	28+-8g-cm	28+-8g-cm
Supply	28+-8g-cm	28+-8g-cm

Fig. M19

4-2. TENSION POST POSITION ADJUSTMENT

* Specification : ----------2.4mm~2.9mm

(1) Remove the Cassette Up unit by unscrewing 4 screws. (Refer to the disassembly procedures titled in Removal of the Cassette Up Unit). Place the unit in Play mode by rotating Drive Gear (A) in clockwise shown below.

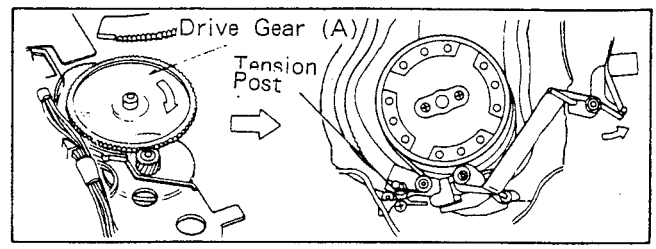

Fig. M20

Note:

In this case, make sure that the power is not applied.

(2) Loosen the screw (A) a little bit and adjust the Tension Post adjustment plate so that the "Distance (A)" shown below becomes just meet in the specification (2.4m~2.9mm).
(3) Tighten the screw (A) to fix it.

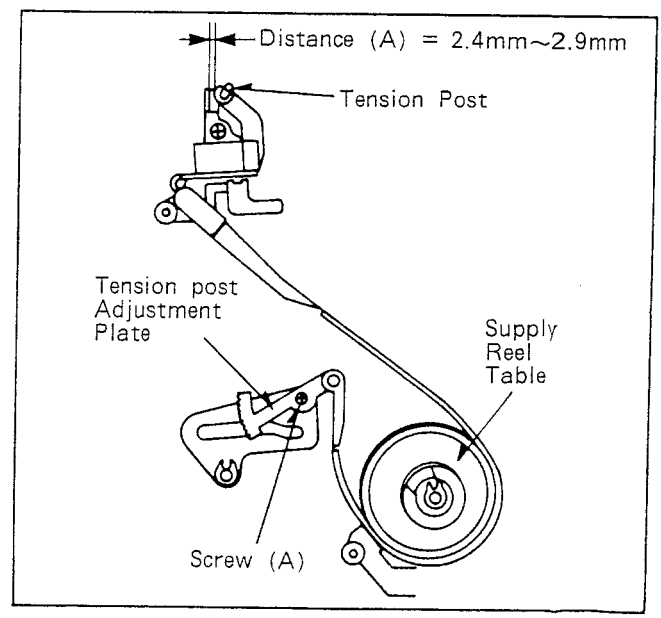

Fig. M21

4-3. BACK TENSION ADJUSTMENT

* Equipment Required:
  Back Tension Meter.....VFK0132
  VHS Cassette Tape (120min.)
* Specificcation: ----------19~23g

1. Playback the cassette tape from the beginning and wait until the tape movement get the stabilization. (for approx. 10~20 seconds)

2. Insert the Back Tension Meter into the path of a tape, and measure the back tension to be within specification as shown in Fig. M22.

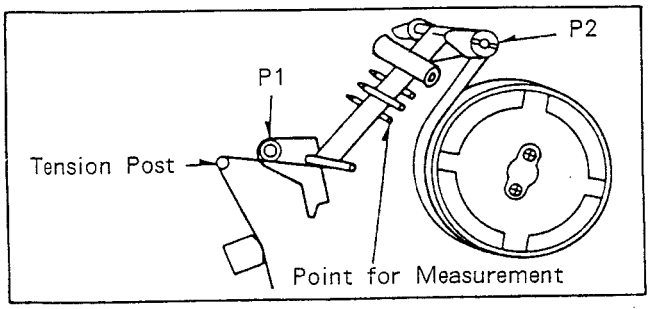

Fig. M22 Measurement of Back Tension

Note:

1. While measuring, make sure that the three probes of the meter are all in good contact with the tape.
2. As the tension meter is very sensitive, we recommend taking 3 separate readings.
3. If it is out of specification, change the spring notch as shown in Fig. M23.

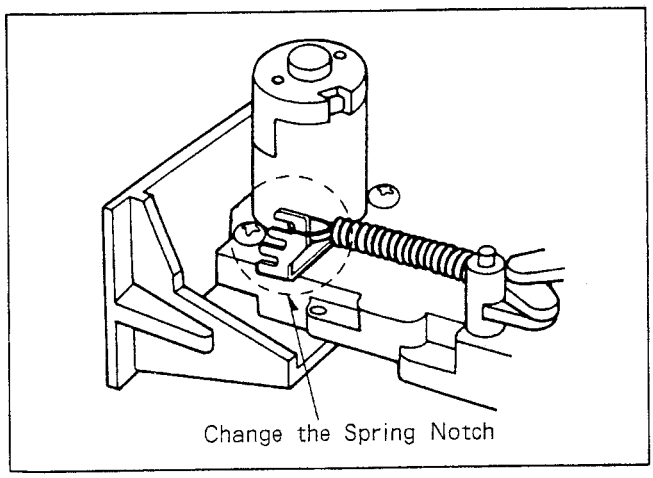

Fig. M23

4-4. REEL TABLES HEIGHT ADJUSTMENT

* Equipment Required:
Post Adjustment Plate.....VFK0191
Reel Table Height Gauge.....VFK0190
* Specification----------0~-0.15mm

Note:

Cut-out on Post Adjustment Plate is reference of reel table height and their height is measured based on this refernce.

1. Place the post adjustment plate on the reels, and put the Gauge on the plate. Set the gauge to zero "0" with the foot scraper of the gauge touching the cut-out portion of the plate.

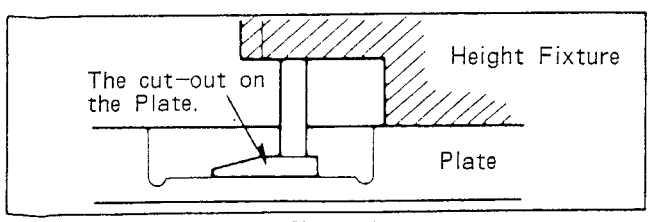

Fig. M24

2. Then measure the height of reel table and confirm the difference just performed in former step as shown below. Do the same way for the other reel table.

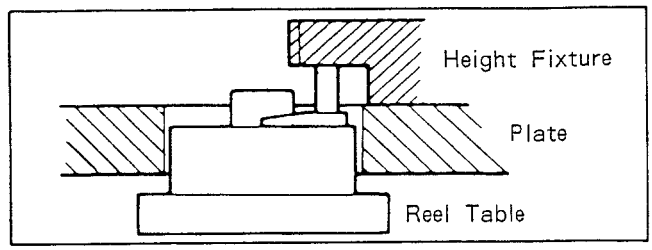

Fig. M25

3. If a height difference in readings between the cut-out portion of plate and reel tables is not 0~-0.15mm (higher or lower), adjust the height of the reel to obtain specified height.
4. For adjustment add or reduce a washer.

4-5. ADJUSTMENT OF FG HEAD GAP

* Specification:----------0.17~0.18mm

(1). Slightly loosen the 2 screws.
(2). Put the paper which is used for cover page of this volume into the gap between F.G.Head and Capstan rotor. (The thickness of the cover page is approx 0.17mm)
(3). After adjustment, tighten 2 screws.

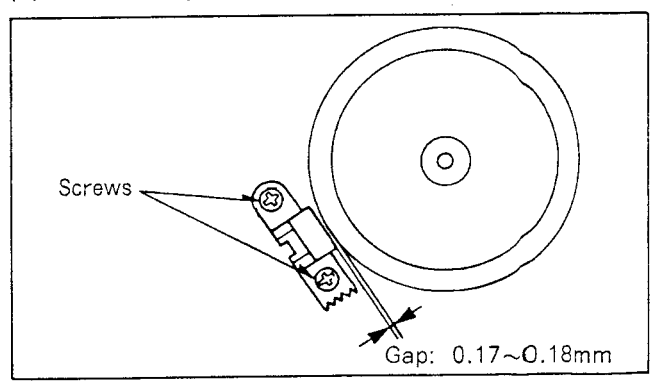

Fig. M26

Note:

Do not touch the surface of rotor and keep any magnetizable material away.

4-6. ASSEMBLY ADJUSTMENT PROCEDURES OF MECHANISM

The mechanism of this model is mostly engaged to the System Control Circuit, through the mode select switch.
Therefore the relation between the mode select switch and the cam gear decides all further mechanical movement of the mechanical parts such as levers, gears, rollers and so on.
If these parts are fixed in properly, the unit will be unloaded or compulsorily stopped.
And it will result being damaged at any mechanical or electrical parts.

4-6-1. ASSEMBLY PROCEDURES OF LOADING RINGS AND LOADING GEARS

(1). Install a Loading–Ring T (1) unit and a Loading Gear (B) so that both triangle marks meet each other as shown below.

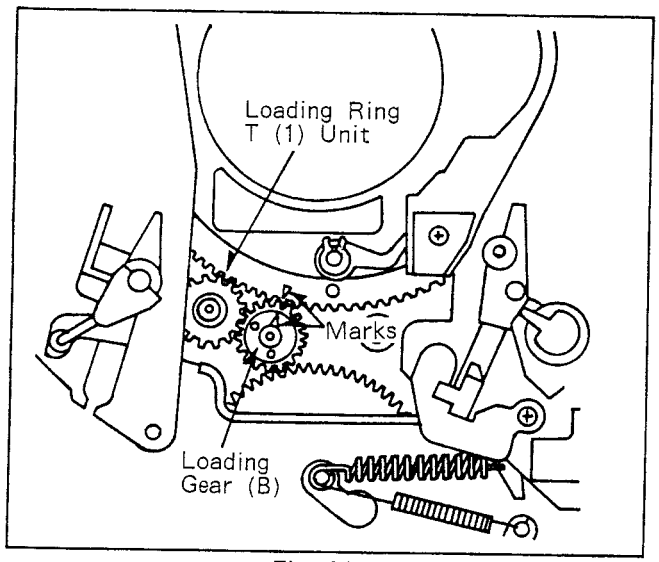

Fig. M27

(2). Install a Loading Gear (A) and next fix a Loading Ring S (1) Unit so that the holes of Loading–Ring S (1) Unit and T (1) Unit meet each other as shown below.

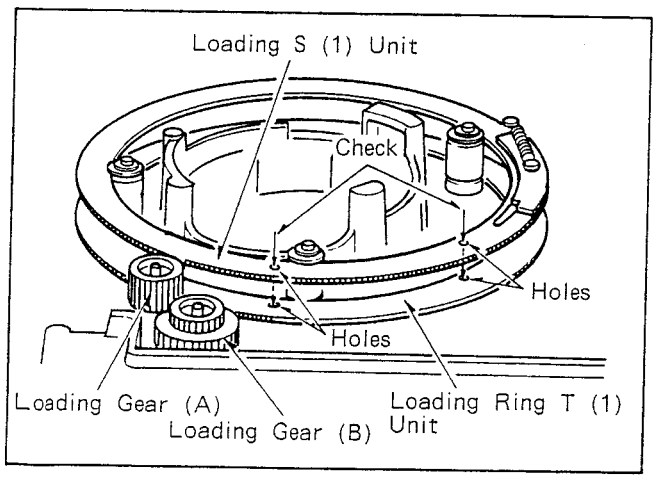

Fig. M28

Note:

Pay attention that the washers are remaining under the loading gears or any other parts.

4-6-2. ASSEMBLY PROCEDURES OF TAKE-UP LOADING GUIDE AND TAKE-UP LOADING POSTS UNIT

(1). Install Loading Guide T Unit and Take–up Post Stopper.
In that time, the small projection of a Loading Link T Unit must be inserted into a gap of Loading Guide T Unit.

(2). Fix a Take–up side Loading Post Unit holding the small projection of the Loading Link T Unit and install a T Shaft Holder Unit.

4-6-3. ASSEMBLY PROCEDURES OF SUPPLY LOADING GUIDES AND SUPPLY LOADING POST UNIT

(1). Install 2 Supply Loading Guides screwing 4 screws.

(2). Slide a Supply Loading Post Unit into a gap between the Loading Guide S1 and S2 hooking a Connection Rod to a Connection Tie Unit as shown below.

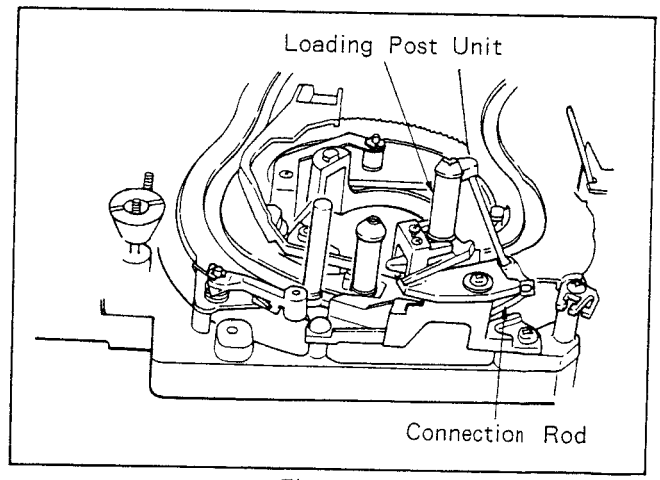

Fig. M29

(3). Set the Supply Loading Post Unit into unloading position by turning a intermediate pully gear as shown below.

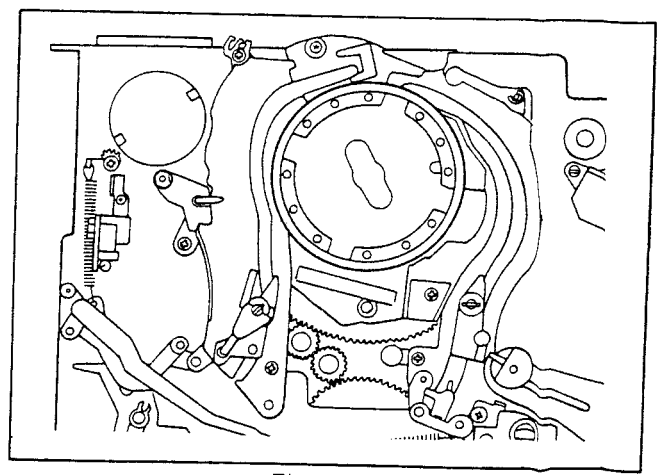

Fig. M30

(4). Install a V Stopper Base and Supply Post Stopper.

4-6-4. ASSEMBLY PROCEDURES OF MAIN ROD.

(1). Place a Main Rod inserting 3 Thrust Washers and then insert 3 washers.
After that, fix them using 2 retaining rings as shown below.

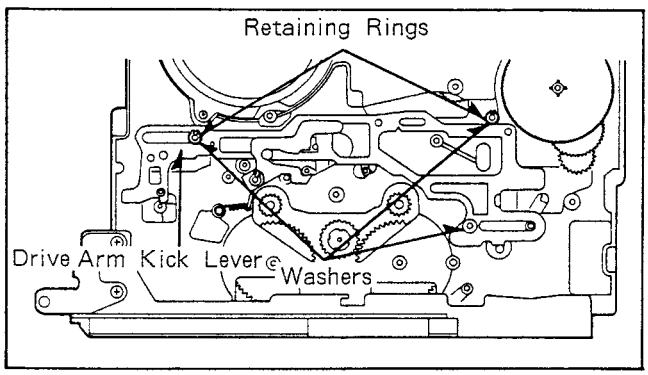

Fig. M31

(2). Install a Drive Arm Kick Lever hooking a Drive Arm Kick Lever Spring and fix it using ring.

4-6-5. ASSEMBLY PROCEDURES OF CAM GEAR AND SECTOR

(1). Make sure that the hole on a Main Rod just should coincide with the hole on chassis as shown below and install a Cam Gear should coincide with he hole between a Cam Gear and the chassis. Then install a retaining ring.

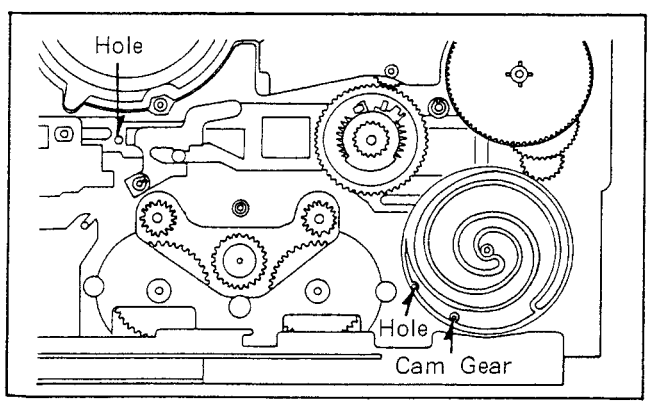

Fig. M32

(2). Install a Loading Gear (C) keeping the relation as shown below.

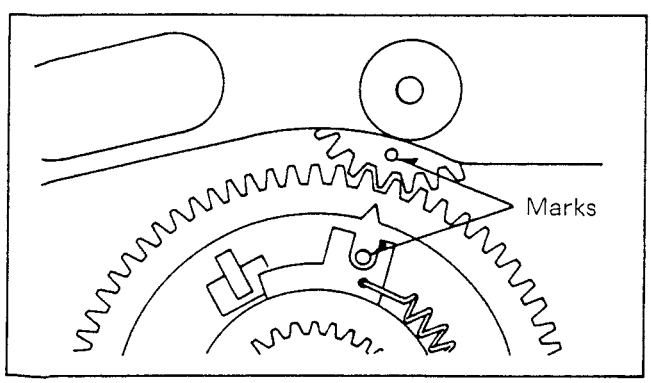

Fig. M33

(3). Install a Sector Gear as shown below.

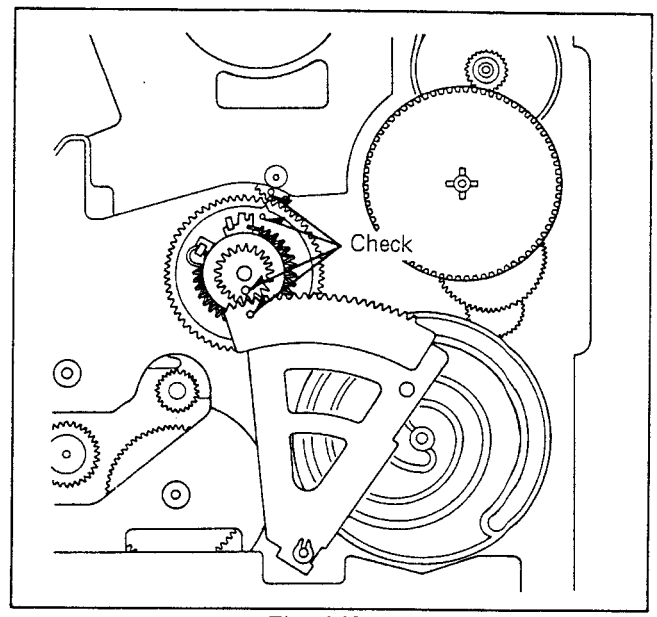

Fig. M34

(4). Fix a SG Limiter by 2 retaining rings.

4-6-6. ASSEMBLY PROCEDURES OF MODE SWITCH

(1). Perform this procedures after confirming the complete setting of mechanical parts.
First of all confirm that the hole on a Main Rod is meeting with a hole on a chassis.

(2). Move the moving contact of a Mode Select Switch into Stop position as shown below.

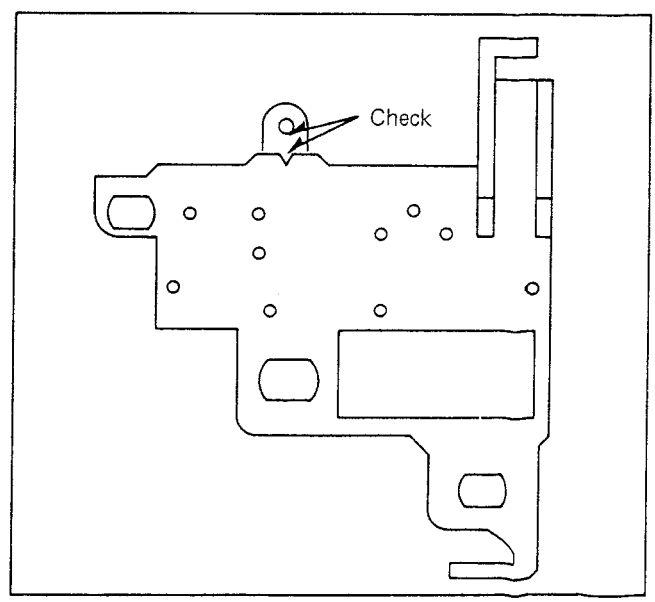

Fig. M35

(3). Install the Mode Select Switch keeping these relation written in item (1) and (2) by screwing 2 screw.

2-4. ELECTRICAL ADJUSTMENT PROCEDURES

2-4-1. ELECTRICAL ADJUSTMENT FOR CAMERA SECTION

TEST EQUIPMENT AND TOOLS

The following equipments are required for adjustment of the VHS Movie NV-M1000EN/EM.

(1) Dual trace Oscilloscope
*Voltage range : 0.05 ~ 50V/div.
*probe : 10:1 or 1:1
(2) V.T.V.M. (Vacuum Tube Volt Meter)
D.V.M. (Digital Volt Meter)
*Voltage range : 0.01 ~ 50V
(3) Frequency Counter
*Frequency range : 0 ~ 10MHz
(4) Vectorscope
(5) Light Meter
(6) Tripod
(7) TV Monitor
(8) Lighting
*3200 degrees kelvin / 1400lux on the chart surface.
(9) Reflection Charts
*Logalithmic Gray Scale Chart (YWV2310RB99)
*Colour Chip Chart (YWV2100RB98)
*Ball Chart / J-Chart (VFK0580)
*B/W / G/W / Hunting Chart (VFK0546)
*White Chart (White paper)
(10) Plastic tip driver
(11) Camera Unit Holder (VFK0382)
(12) Camera Holder Arm (VFK0431)
(13) Colour temperature conversion filters
*C12 filter (VFK0374)
*C2 filter (VFK0375)
*C8 filter (VFK0547)
(14) Camera Extension Cables
*14Pin Cable (VFK0430)
*18Pin Cable (VFK0380) 2pcs

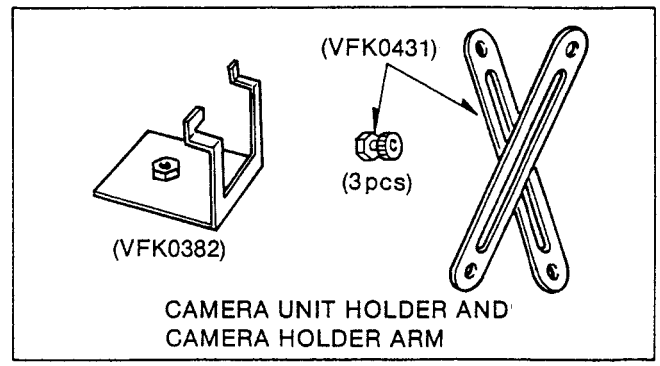

Fig. C1

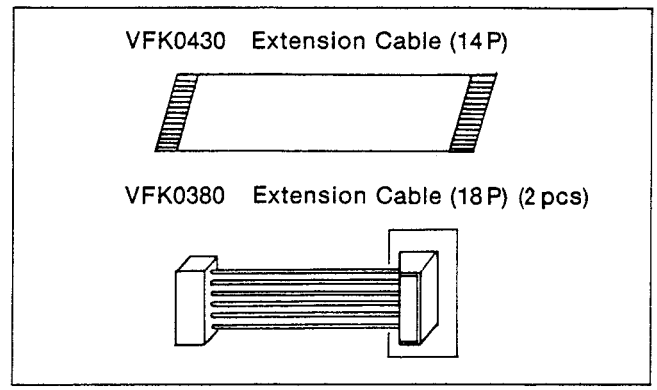

Fig. C2

PREPARATION
(1) Remove the casing panels.
(2) Mount the unit to tripod directly.
(3) White balance switch to "INDOOR"
(4) Auto focus selector to "OFF"
(5) High speed shutter to "OFF"
(6) Iris VR to centre click portion.

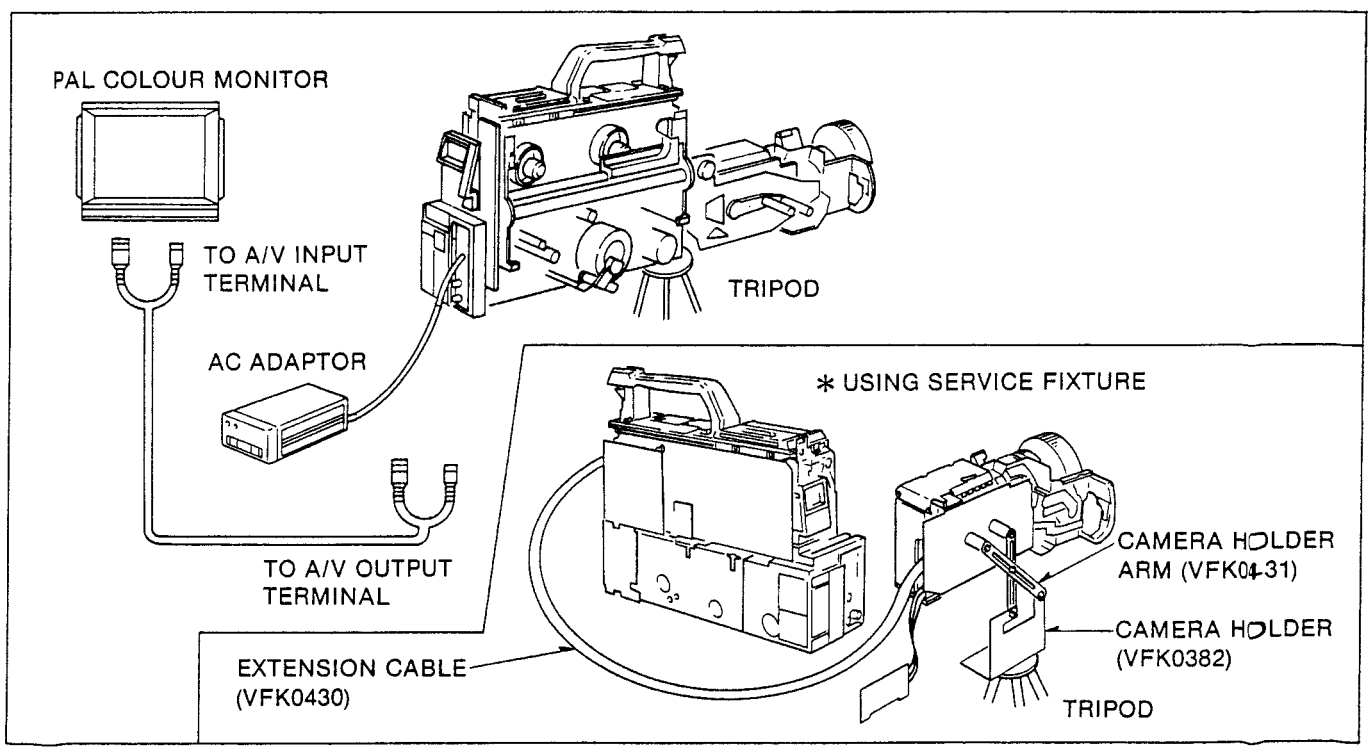

Fig. C3

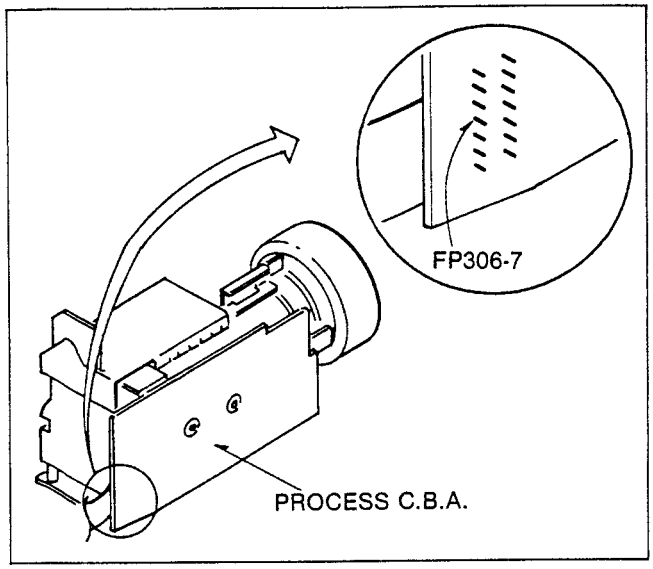

Fig. C4

HOW TO READ THE ADJUSTMENT PROCEDURES

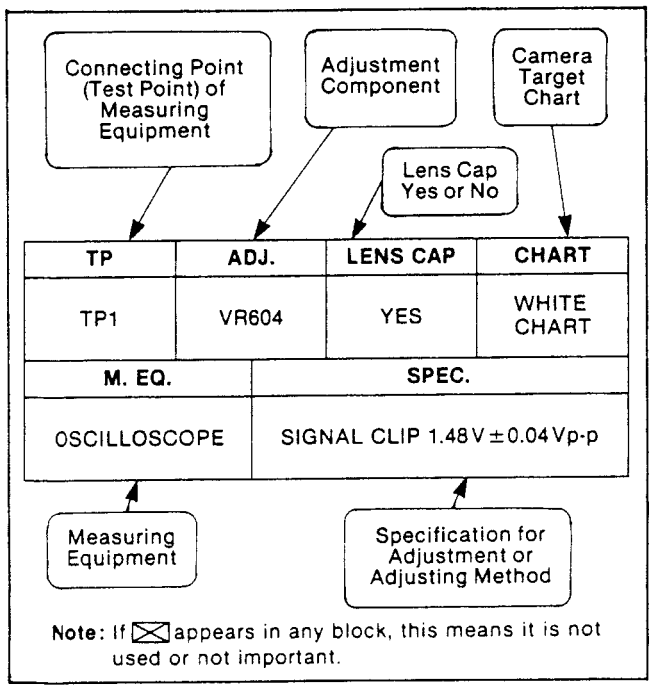

Fig. C5

CCD DRIVE SECTION

1. BACK FOCUS ADJUSTMENT
2. PLL FREQUENCY ADJUSTMENT
3. V-SUB ADJUSTMENT
4. CCD OUTPUT ADJUSTMENT

PROCESS SECTION

5. AGC ADJUSTMENT
6. Y 1H/2H DELAY LEVEL ADJUSTMENT
7. YH LEVEL ADJUSTMENT
8. CHROMA 1H/2H DELAY LEVEL ADJUSTMENT
9. BURST PHASE ADJUSTMENT
10. PEDESTAL LEVEL ADJUSTMENT
11. IRIS VR ADJUSTMENT
12. ALC ADJUSTMENT
13. CARRIER BALANCE AND BLACK LEVEL ADJUSTMENT
14. INDOOR WHITE BALANCE ADJUSTMENT
15. OUTDOOR WHITE BALANCE ADJUSTMENT
16. AWB OFFSET ADJUSTMENT
17. COLOUR PHASE AND R-Y/B-Y GAIN ADJUSTMENT
18. HIGH INTENSITY SUPPRESS (HIGH CUT) ADJUSTMENT
19. AWT MODE (OFFSET) ADJUSTMENT
20. AWT MODE (GAIN) ADJUSTMENT
21. HALL AMP ADJUSTMENT

AUTO FOCUS SECTION

22. AF GATE ADJUSTMENT
23. BIMOLF GAIN CONTROL ADJUSTMENT
24. AF VH FREQUENCY ADJUSTMENT

TABLE 1

CCD DRIVE SECTION

1.BACK FOCUS ADJUSTMENT

(1) Aim the camera at the Hunting Chart 3m distance and zoom all the way in fully tele position.
(2) Focus the lens on the object.
(3) Confirm that Focus ring indicates 3m.
(4) Adjust the relay lens adjustment point as shown in Fig. C6.

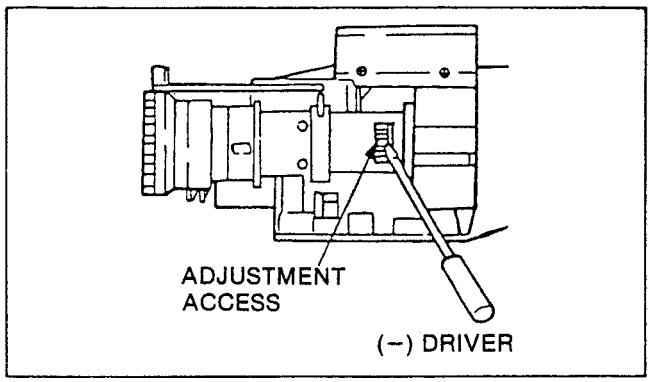

Fig. C6

2. PLL FREQUENCY ADJUSTMENT

TP	ADJ.	LENS CAP	CHART
PIN 7 OF B201	C206		
M. EQ.		SPEC.	
FREQUENCY COUNTER		9.656250MHz±10Hz	

B201,C206 : Sensor C.B.A.

(1) Connect the frequency counter to Pin 7 of B201
(2) Adjust the C206 (PLL frequency control) so that the frequency becomes 9.656250MHz +− 10Hz

3. V-SUB ADJUSTMENT

TP	ADJ.	LENS CAP	CHART
	VR201	NO	REFER TO Fig. C7
M. EQ.		SPEC.	
MONITOR TV		NO BLOOMING	

(1) Zoom all the way in fully tele position and aim the camera at the Halogen lamp as shown in in Fig. C7.
(2) Set the High Speed Shutter SW to OFF position.

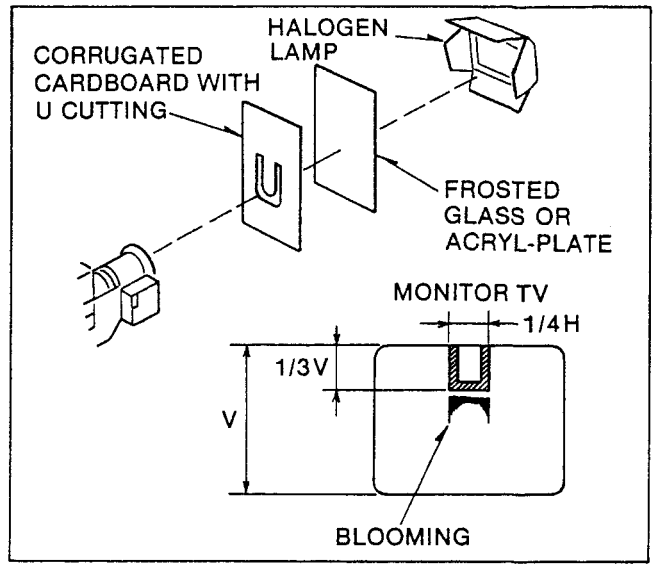

Fig. C7

(3) Blind the lighting using frosted glass or acryl plate to diffuse incoming light, and also put a corrugated cardboard which inside is cut to "U" shape as shown in Fig. C8.
(4) Connect the jumper wire between TP516 and TP520 to open the iris.
(5) Adjust VR201 (Blooming control) so that blooming is just disappeared.
If blooming is not disappeared completely, adjust VR201 until minimum blooming.
(6) High Speed Shutter "ON" and "OFF" both mode, confirm that the monitored picture does not contain the blooming even the corrugated cardboard moves as shown in Fig. C8.

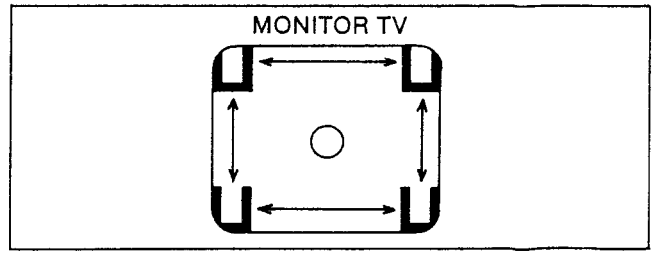

Fig. C8

Note :
J-Chart is also available for rough

(1) Aim the camera at J-Chart.
(2) Set the lens to fully tele position. And set the distance so that lower 1/3 of J-Chart comes to full picture frame on TV screen.
(3) Connect the jumper wire between TP516 and TP520 to open the the iris.
(4) Adjust the VR201 so that the blooming is just disappeared.

4. CCD OUTPUT ADJUSTMENT

TP	ADJ.	LENS CAP	CHART
TP201	VR202	NO	J CHART
M. EQ.		SPEC.	
OSCILLOSCOPE		180mV±10mV	

Note :
TP201,VR202 : Sensor C.B.A.
TP515,VR327 : Process C.B.A.

(1) Aim the camera at J-Chart.
(2) Adjust the VR327 (ALC control) so that the voltage at TP515 becomes 280mV +- 10mV.
(3) Adjust the VR202 (CCD output control) so that the level "A" of TP201 becomes 180mV +- 10mV as shown in Fig. C9.

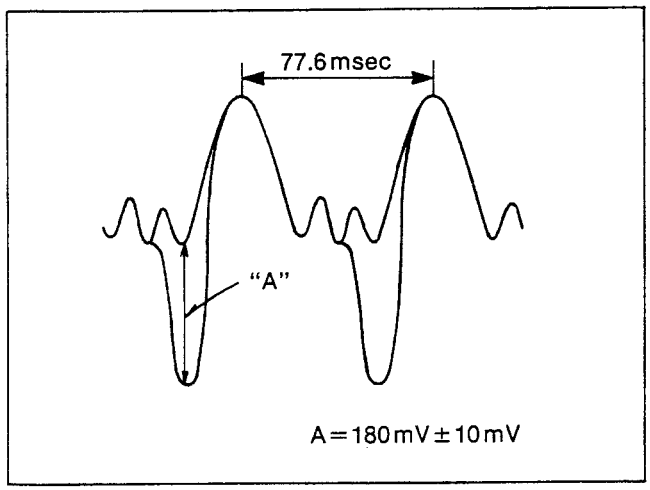

Fig. C9

PROCESS SECTION

5. AGC ADJUSTMENT

TP	ADJ.	LENS CAP	CHART
TP514	VR324	NO	GRAY SCALE CHART
M. EQ.		SPEC.	
OSCILLOSCOPE		300mV±20mVp-p	

Note :
TP514,VR324 : Process C.B.A.

(1) Aim the camera at the Gray Scale Chart.
(2) Connect the oscilloscope to TP514 and trigger with pin 7 of FP306 (H-rate).
(3) Adjust the zoom to obtain 40usec picture frame as shown in Fig. C10.
(4) Adjust the VR324 (AGC control) so that the signal level becomes 300mV +- 20mVp-p.

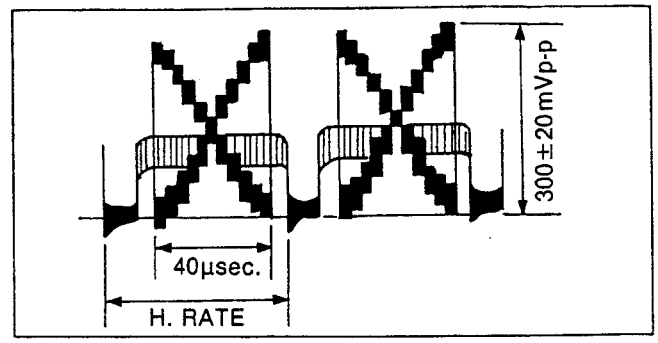

Fig. C10

6. Y 1H/2H DELAY LEVEL ADJUSTMENT

TP	ADJ.	LENS CAP	CHART
TS5, TS2, TS8 (TEST ROUND)	VR320 VR318	NO	GRAY SCALE
M. EQ.		SPEC.	
OSCILLOSCOPE		0±4.5mVp-p	

Note :
TS2,TS5,TS8,VR318,VR320 : Process C.B.A.

(1) Aim the camera at the Gray Scale Chart.
(2) Connect the oscilloscope to TS5 (CH-A) and TS2 (CH-B). (The gain for CH-A and CH-B should be same.)
(3) Set the CH-B for "INVERT" mode.
(4) Set the oscilloscope for "ADD" mode.
(5) Adjust the VR320 (1H delay level control) so that the waveform level becomes 0 +- 4.5mVp-p.
(6) Reconnect the CH-B probe to TS8 and continue the "INVERT" mode for CH-B. (CH-A still connecting to TS5.)
(7) Adjust the VR318 (2H delay level control) so that waveform level becomes 0 +- 4.5mVp-p.

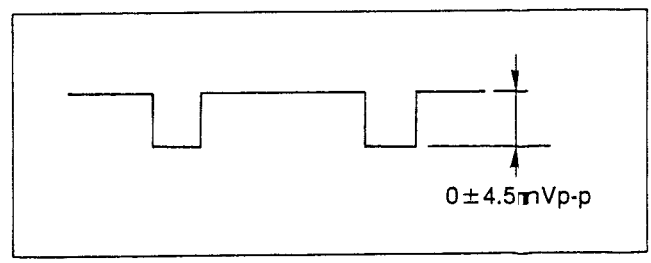

Fig. C11

7. YH LEVEL ADJUSTMENT

TP	ADJ.	LENS CAP	CHART
PIN 7 OF FP306	VR315	NO	GRAY SCALE CHART
M. EQ.		SPEC.	
OSCILLOSCOPE		B/A=2.33±0.15	

Note :
FP306,VR315 : Process C.B.A.

(1) Aim the camera at the Gray Scale Chart.
(2) Connect the oscilloscope to pin7 of FP306.
(3) Adjust the VR315 (YH level control) so that the signal ratio "B/A" becomes 2.33 +- 0.15 as shown in Fig. C12.

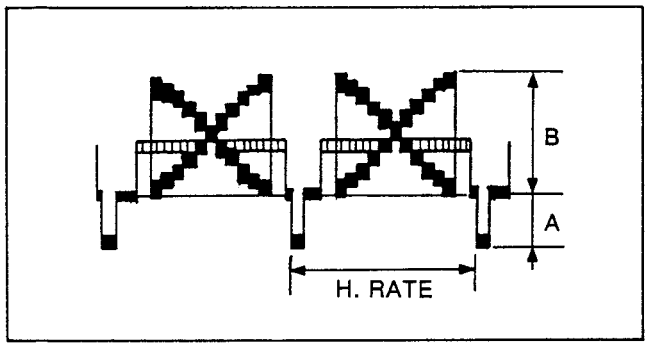

Fig. C12

8. CHROMA 1H/2H DELAY LEVEL ADJUSTMENT

TP	ADJ.	LENS CAP	CHART
TS7, TS10, TS11 (TEST ROUND)	VR319 VR317	YES	
M. EQ.		SPEC.	
OSCILLOSCOPE		0±4.5mV	

Note :
TS7,TS10,TS11,VR317,VR319 : Process C.B.A.

(1) Cover the camera lens with lens cap.
(2) Supply the "WHD" signal from Pin2 of B305 to TS7 through the buffer circuit and adjust VR1 on the buffer circuit so that the level of TS7 becomes 300mV +- 5mVp-p as shown in Fig. C13.

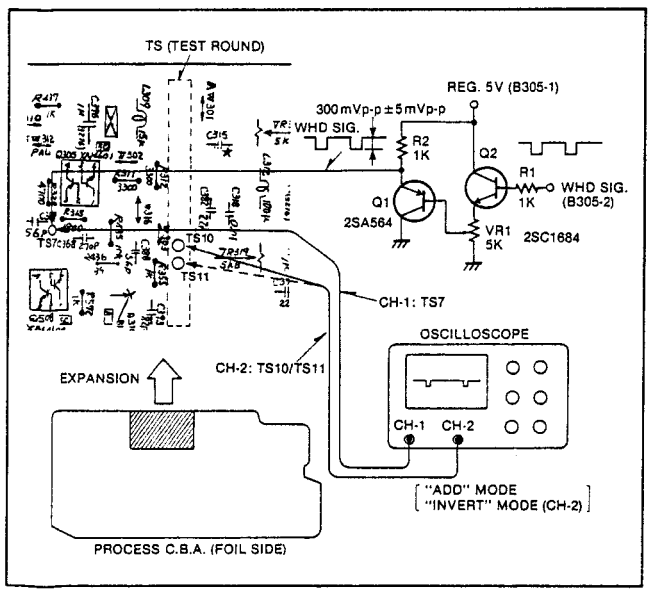

Fig. C13

(3) Set the oscilloscope to "ADD" mode and "INVERT" mode for CH-B.
(4) Connect the oscilloscope CH-A to TS7 and CH-B to TS10.
(5) Adjust the VR319 (Chroma 1H delay level control) so that the level of waveform becomes 0 +- 4.5mV.
(6) Exchange the connecting point of CH-B from TS10 to TS11.
(7) Adjust the VR317 (Chroma 2H delay level control) so that the level of waveform becomes 0 +- 4.5mV.

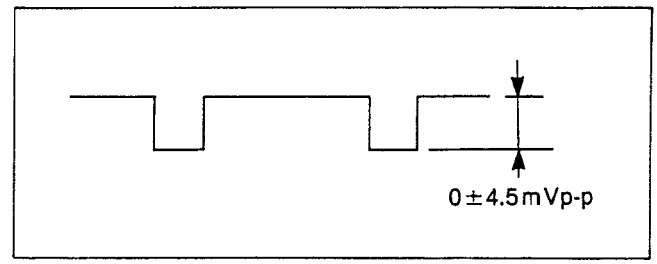

Fig. C14

9. BURST PHASE ADJUSTMENT

TP	ADJ.	LENS CAP	CHART
VIDEO OUT	VR329	YES	
M. EQ.		SPEC.	
VECTOR SCOPE		135 degree±2 degree	

Note :
VR329 : Process C.B.A.

(1) Cover the lens with lens cap.
(2) Supply the video output to vectorscope.
(3) Set the vectorscope for NTSC mode.
(4) Adjust the VR329 (Burst phase control) so that burst phase becomes 135 +- 2degrees.

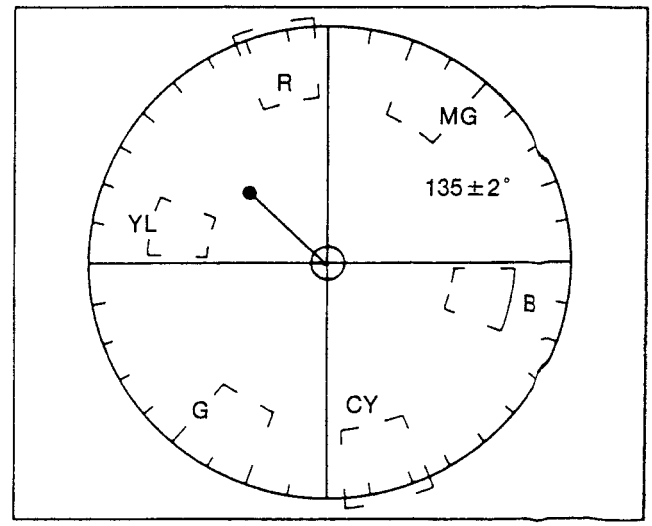

Fig. C15

10. PEDESTAL LEVEL ADJUSTMENT

TP	ADJ.	LENS CAP	CHART
TP514	VR301	YES	
M. EQ.		SPEC.	
OSCILLOSCOPE		SIGNAL LEVEL EQUALS THE BLANKING (BLANK) LEVEL.	

Note :
TP514,VR301 : Process C.B.A.

(1) Cover the camera lens with lens cap.
(2) Connect the oscilloscope to TP514 and trigger with Pin7 of FP306 (H-rate).
(3) Adjust the VR301 (Pedestal level control) so that the signal level equals the BLK (Blanking) level as shown in Fig. C16.

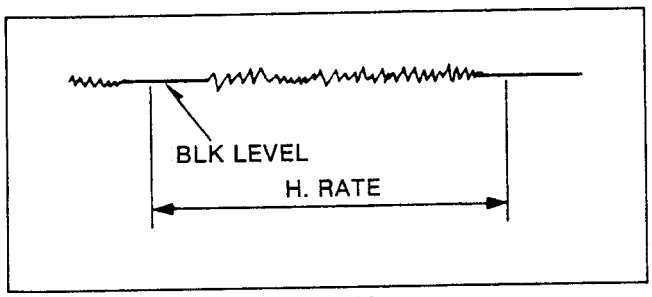

Fig. C16

11. IRIS VR ADJUSTMENT

TP	ADJ.	LENS CAP	CHART
TP523	VR322	YES	
M. EQ.		SPEC.	
D.V.M. V.T.V.M.		2.1V±0.1V	

Note :
TP523,VR322 : Process C.B.A.
AGC adjustment should be completed.

(1) Set the iris VR to centre click position and cover the camera lens with the lens cap.
(2) Connect the volt meter to TP523.
(3) Adjust VR322 (Iris control) so that the DC voltage of TP523 becomes 2.1V +- 0.1V

12. ALC ADJUSTMENT

TP	ADJ.	LENS CAP	CHART
TP515	VR327	NO	GRAY SCALE CHART
M. EQ.		SPEC.	
OSCILLOSCOPE		280mV±20mVp-p	

Note :
TP515,VR327 : Process C.B.A.

(1) Set the iris VR to centre click position.
(2) Aim the camera at the Gray Scale Chart.
(3) Connect the oscilloscope to TP515 and trigger with Pin7 of FP306 (H-rate).
(4) Adjust the zoom to obtain 40usec picture frame as shown in Fig. C17.
(5) Adjust the VR327 (Auto iris control) so that the signal level becomes 280mV +- 20mVp-p.

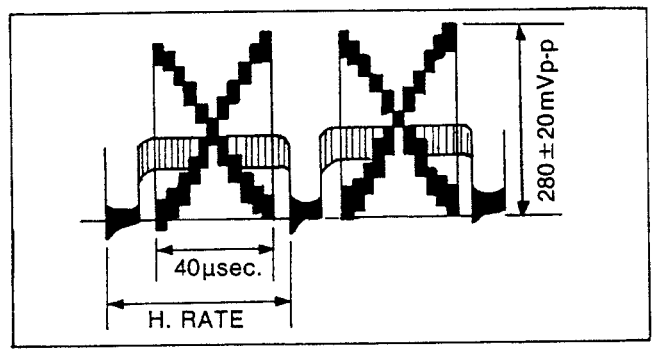

Fig. C17

13. CARRIER BALANCE AND BLACK LEVEL ADJUSTMENT

TP	ADJ.	LENS CAP	CHART
VIDEO OUTPUT	VR305 VR306 VR303 VR304	YES	
M. EQ.		SPEC.	
VECTORSCOPE		CENTER OF VECTORSCOPE	
OSCILLOSCOPE		WAVEFORM IS MINIMIZED	

Note :
TP511,TP512,TP513,VR303,VR304,VR305,VR306 : Process C.B.A.

WITH VECTORSCOPE

(1) Cover the lens with lens cap.
(2) Connect the jumper wire between centre of VR324 and TP511.
(3) Connect the jumper wire among TP511, TP512 and TP513 to cut the R-Y, B-Y feed back loop.

(4) Adjust the VR305 and VR306 (Black pedestal controls) so that the colour vector at the centre of screen on vectorscope.
(5) Disconnect the jumper wire between VR324 and TP511.
(6) Adjust the VR303 and VR304 (Carrier balance controls) so that the colour vector at the centre of screen on vectorscope.

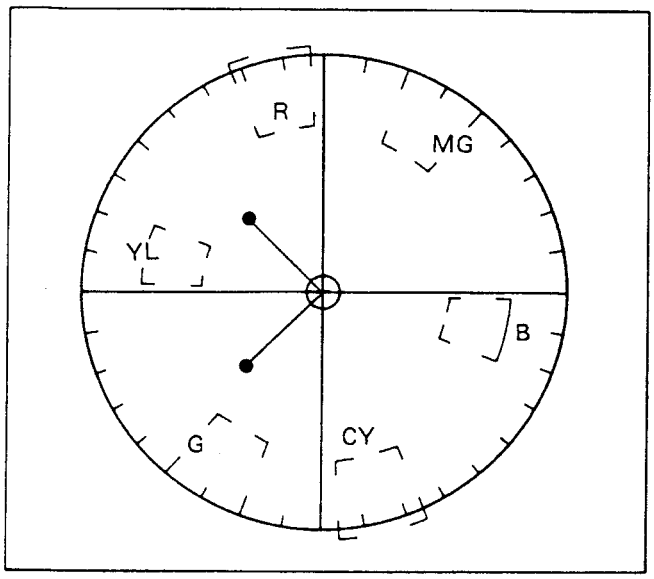

Fig. C18

WITH OSCILLOSCOPE

(1) Adjustment condition and procedures are the same as using vectorscope.
(2) Adjust the VR305 and VR306 first so that the waveform becomes minimized as shown in Fig. C19.
(3) Adjust the VR303 and VR304 so that the waveform becomes minimized as shown in Fig. C19.

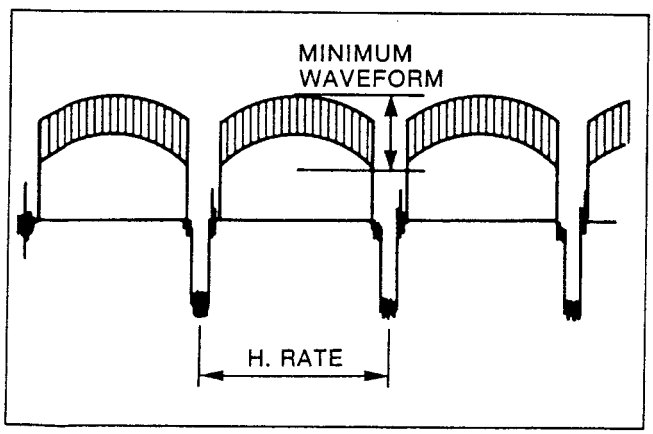

Fig. C19

14. INDOOR WHITE BALANCE ADJUSTMENT

TP	ADJ.	LENS CAP	CHART
VIDEO OUTPUT	VR311 VR312	NO	WHITE CHART

M. EQ.	SPEC.
VECTORSCOPE	CENTER OF VECTORSCOPE
OSCILLOSCOPE	WAVEFORM IS MINIMIZED

Note :
TP511,TP512,TP513,VR311,VR312 : Process C.B.A.

WITH VECTORSCOPE

(1) Set the White balance switch to "INDOOR" mode.
(2) Connect the jumper wire among TP511,TP512 and TP513 to cut the R−Y, B−Y feed back loop.
(3) Aim the camera at the White Chart.
(4) Supply the video output to vectorscope.
(5) Adjust the VR311 and VR312 (White balance controls) so that the colour vector at the centre of screen on vectorscope.

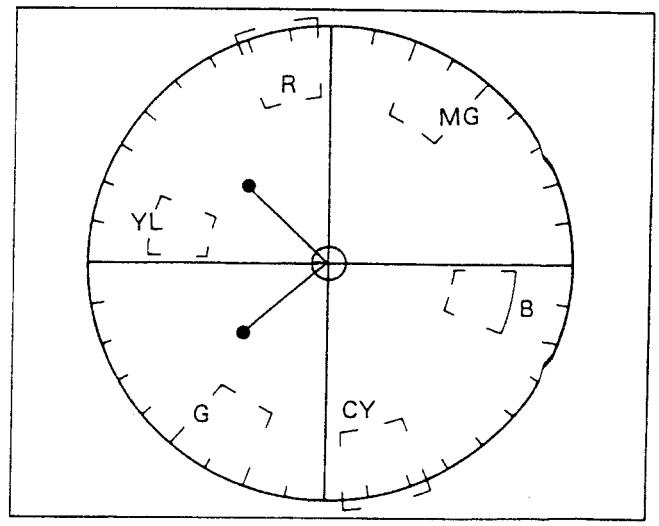

Fig. C20

WITH OSCILLOSCOPE

(1) Adjustment condition and procedures are the same as using vectorscope.
(2) Adjust the VR311 and VR312 so that the waveform becomes minimized.

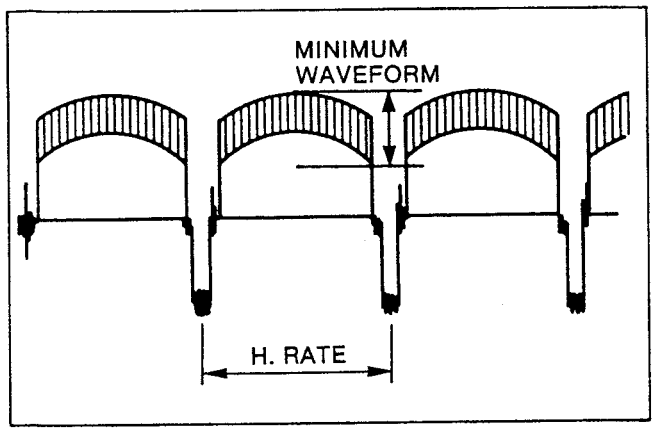

Fig. C21

15. OUTDOOR WHITE BALANCE ADJUSTMENT

TP	ADJ.	LENS CAP	CHART
VIDEO OUTPUT	VR528 VR529	NO	WHITE CHART
M. EQ.		SPEC.	
VECTORSCOPE		CENTER OF VECTORSCOPE	
OSCILLOSCOPE		WAVEFORM IS MINIMIZED	

Note :
TP511,TP512,TP513,VR528,VR529 : Process C.B.A.

WITH VECTORSCOPE

(1) Set the White balance switch to "OUTDOOR".
(2) Connect the jumper wire among TP511,TP512 and TP513 to cut the R−Y, B−Y feed back loop.
(3) Aim the camera at the White Chart.
(4) Supply the video output to vectorscope.

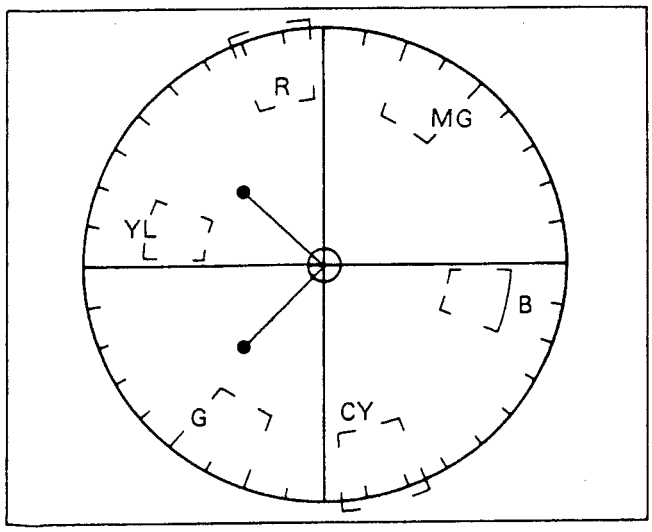

Fig. C22

(5) Attach the colour temperature conversion filter VFK0374 (C12) and VFK0375 (C2) which convert 3200 degrees Kelvin to 5600 degrees Kelvin in front of the lens and AWT sensor. (If the colour temperature conversion filters are not available, use a day light source.)
(6) Adjust the VR528 and VR529 (Outdoor gain controls) so that the colour vector at the centre of screen on vectorscope.

WITH OSCILLOSCOPE

(1) Adjustment condition and procedures are the same as using vectorscope.
(2) Adjust VR528 and VR529 so that the waveform becomes minimized.

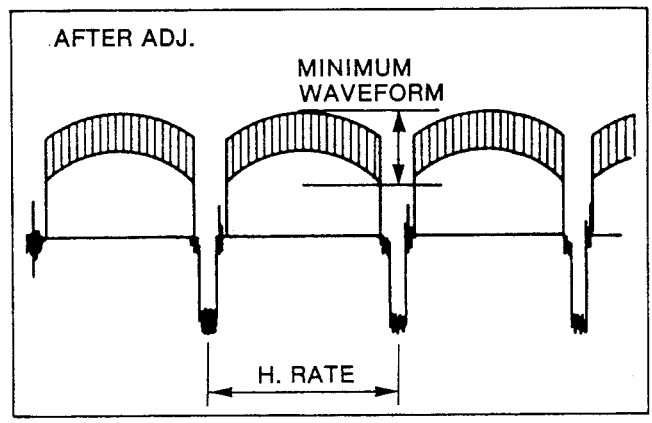

Fig. C23

HOW TO ATTACH THE FIXTURE

Attach the fixture to the lens and then set the colour temperature conversion filter to fixture.

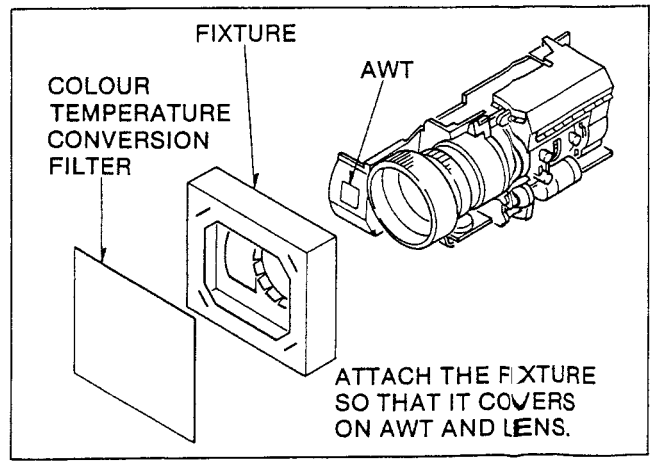

Fig. C24

HOW TO MAKE A FIXTURE

(1) Print the actual measure at the hard paper referring Fig. C25.
(2) Cut the paper along the solid line.
(3) Apply the past to the oblique line.
(4) Fold the paper along the dotted line.
(5) Construct the fixture referring completion drawing.

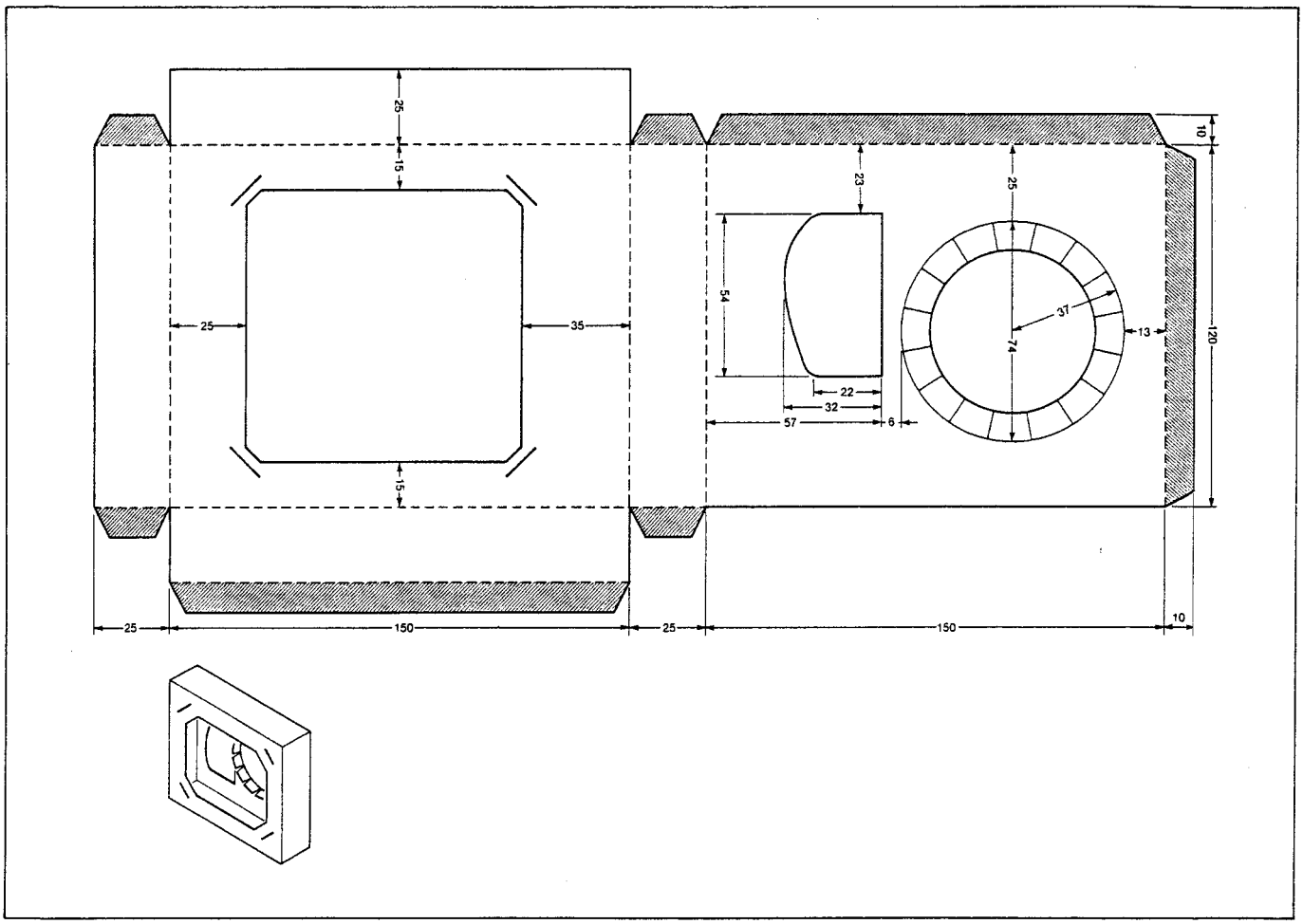

Fig. C25

HOW TO USE THE SUN LIGHT

Incoming light mist be outdoor source (Sun light) only, source and illumination on the sensor must be more than 500Lux, and colour temperature must be within 5000 to 6000 degrees Kelvin.

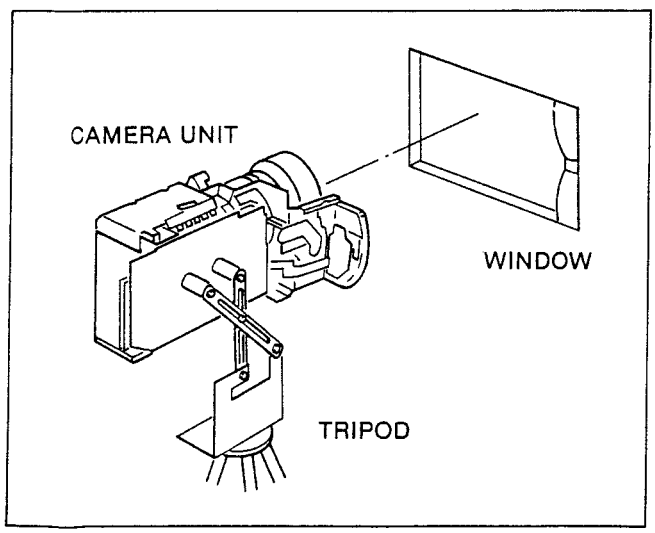

Fig. C26

16. AWB OFFSET ADJUSTMENT WITH OSCILLOSCOPE

TP	ADJ.	IRIS	CHART
TP511 TP512 TP513	VR530 VR531		WHITE CHART
M. EQ.		**SPEC.**	
OSCILLOSCOPE		0±0.1V	

Note :

TP511,TP512,TP513,TP519,TP521,VR530,VR531 : Process C.B.A.

(1) Set the White Balance Switch to "INDOOR"
(2) Connect the jumper wire between TP519 and TP521 to make a easy adjustment.
(3) Aim the camera to White Chart.
(4) Connect the oscilloscope to TP512 and GND probe to TP511.
(5) Adjust the VR530 (AWB OFFSET) so that the voltage becomes 0 +- 0.1V at TP512.
(6) Exchange the HOT probe from TP512 to TP513.
(7) Adjust the VR531 (AWB OFFSET) so that the voltage becomes 0 +- 0.1V at TP513.

9:19

17. COLOUR PHASE AND R-Y/B-Y GAIN ADJUSTMENT

TP	ADJ.	LENS CAP	CHART
VIDEO OUTPUT	VR310 VR307 VR314 VR313 VR328	NO	COLOUR CHIP CHART
M. EQ.		SPEC.	
VECTORSCOPE		Fig. C27	

Note :
TP511,TP512,TP513,VR307,VR310,VR313,VR314, VR328 : Process C.B.A.

(1) Aim the camera at the Colour Chip Chart.
(2) Set the vectorscope for NTSC mode.
(3) Adjust the VR310 (Colour phase control) so that the cracked Red vector comes one.
(4) Set the vectorscope to PAL mode.
(5) Connect the jumper wire among TP511,TP512 and TP513.
(6) Adjust the VR307 and VR308 (Colour phase control), VR313 (R-Y Gain control), VR314 (B-Y Gain control) so that the vector of each colour as shown in Fig. C27.

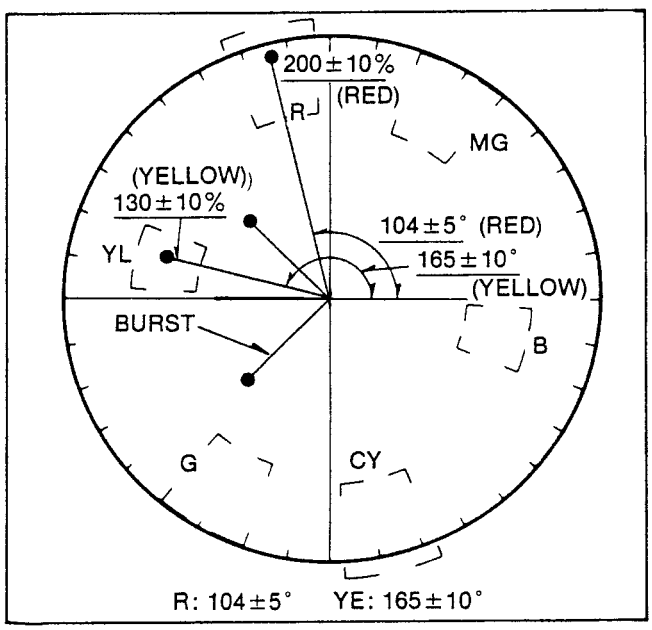

Fig. C27

18. HIGH INTENSITY SUPPRESS (HC) ADJUSTMENT

TP	ADJ.	LENS CAP	CHART
	VR309	NO	COLOUR CHART
M. EQ.		SPEC.	
TV MONITOR		HALF SIZE (YELLOW) YELLOW COLOUR IS JUST BEFORE CUT OFF	

Note :
VR309 : Process C.B.A.

(1) Aim the camera at the Colour Bar.
(2) Set the horizontal picture frame to 40usec, and memorize the level of Yellow part.
(3) Set the horizontal picture frame to 16usec. (Expand the Yellow part.)
(4) In case that the level of Yellow part is more than 50% compared with the Yellow level of when horizontal picture frame was 40usec, adjust the VR309 (High cut control) so that the level of yellow becomes 50% as shown in Fig. C28.
(5) In case that the level of Yellow part is already less than 50% of when the horizontal picture frame was 40usec, adjust the VR309 until before just Yellow part begins to disappear.

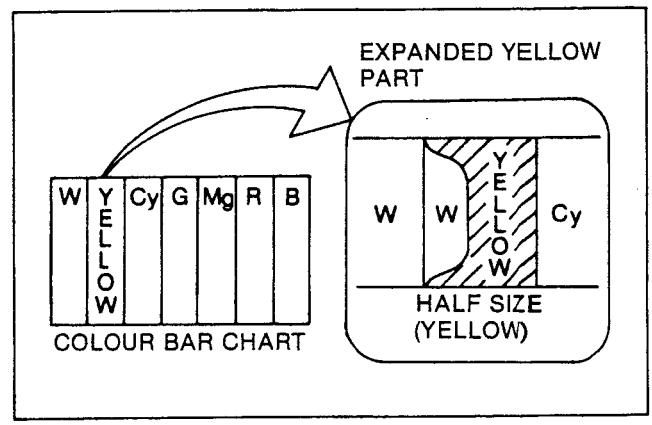

Fig. C28

19. AWT MODE (OFFSET) ADJUSTMENT

TP	ADJ.	LENS CAP	CHART
VIDEO OUTPUT	VR525 VR526	NO	WHITE CHART
M. EQ.		SPEC.	
VECTORSCOPE		CENTER OF VECTORSCOPE	
OSCILLOSCOPE		WAVEFORM IS MINIMIZED	

Note :
TP511,TP512,TP513,TP519,TP521,VR525,VR526 : Process C.B.A.

WITH VECTORSCOPE

(1) Set the White balance switch to "AUTO".
(2) Aim the camera at the White Chart.
(3) Supply the video output to vectorscope.
(4) Connect the jumper wire among TP511, TP512 and TP513 to cut the R-Y, B-Y feed back loop.
(5) Connect the jumper wire between TP519 and TP521 to make a easy adjustment.
(6) Adjust the VR525 and VR526 (AWT Offset control) so that the vectors move to centre of screen on vectorscope.

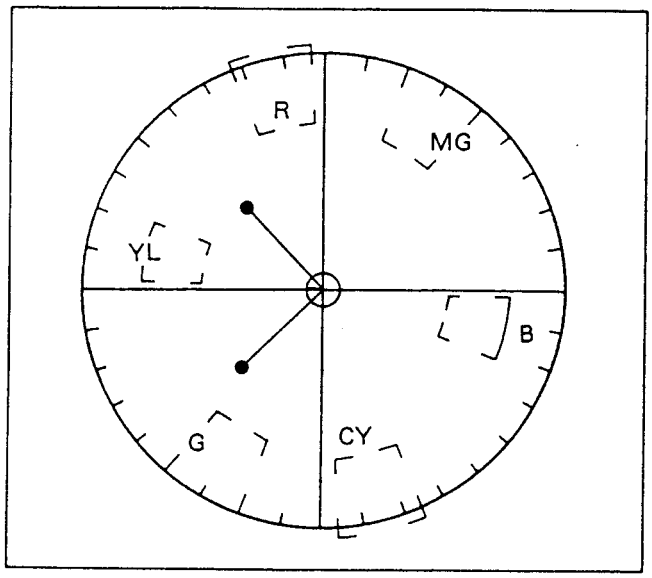

Fig. C29

WITH OSCILLOSCOPE

(1) Adjustment condition and procedures are the same as using vectorscope.
(2) Adjust the VR525 and VR526 so that the waveform becomes minimized.

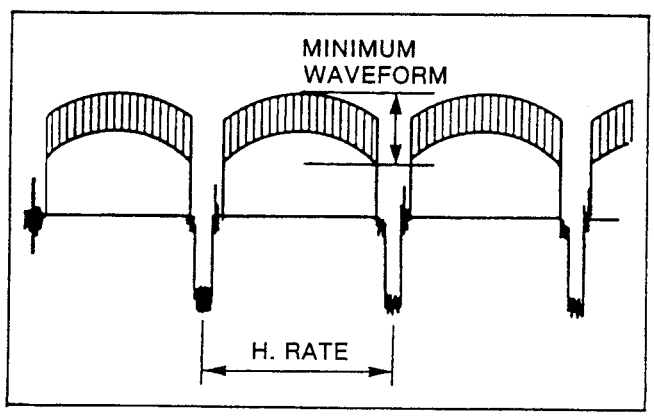

Fig. C30

20. AWT MODE (GAIN) ADJUSTMENT

TP	ADJ.	LENS CAP	CHART
VIDEO OUTPUT	VR523 VR527	NO	WHITE CHART
M. EQ.		SPEC.	
VECTORSCOPE		CENTER OF VECTORSCOPE	
OSCILLOSCOPE		WAVEFORM IS MINIMIZED	

Note:
TP511,TP512,TP513,TP519,TP521,VR523,VR527 : Process C.B.A.

WITH VECTORSCOPE

(1) Set the White balance switch to "AUTO".
(2) Aim the camera at the White Chart.
(3) Supply the video output to vectorscope.
(4) Connect the jumper wire among TP511,TP512 and TP513 to cut the R−Y, B−Y feed back loop.
(5) Connect the jumper wire between TP519 and TP521 to make a easy adjustment.
(6) Attach the fixture with colour temperature conversion filter VFK0547 (C8) to the in front of lens.

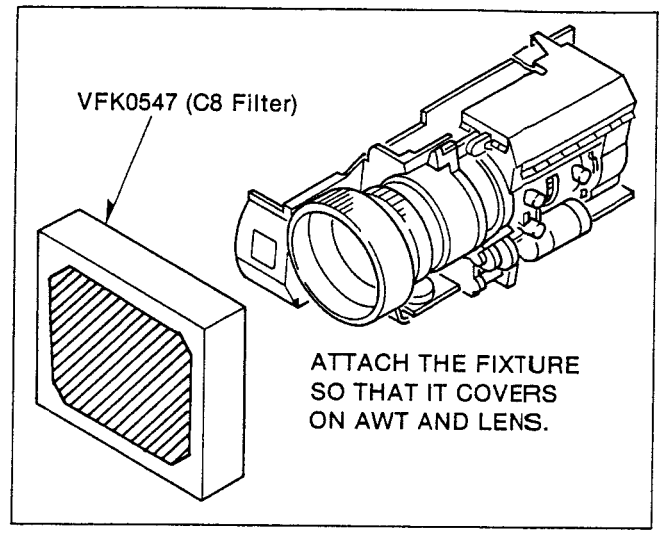

Fig. C31

(7) Adjust the VR523 and VR527 ((AWT Gain control) so that the colour vector moves to centre of screen on vectorscope.
(8) Next, remove the fixture with filter from lens and confirm that whether colour vector moves to centre or not. If not, readjust the AWT offset adjustment again and then repeat this adjustment.

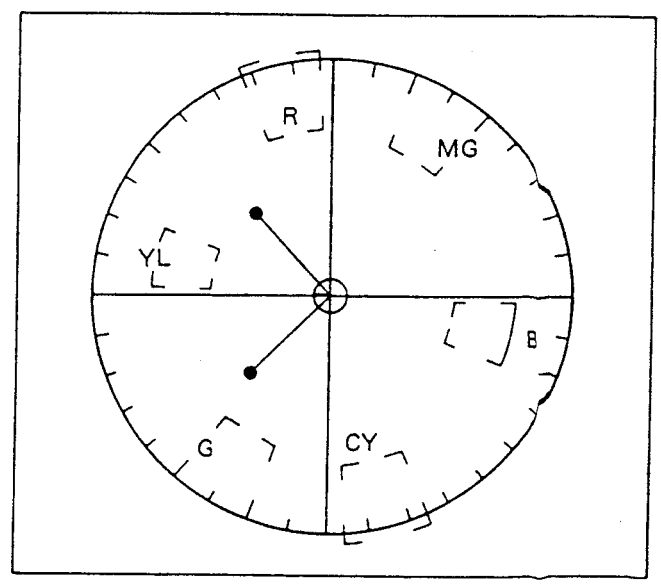

Fig. C29

WITH OSCILLOSCOPE

(1) Adjustment condition and procedures are the same as using vectorscope.
(2) Adjust the VR523 and VR527 so that the waveform becomes minimized.
(3) Confirm the AWT offset mode.

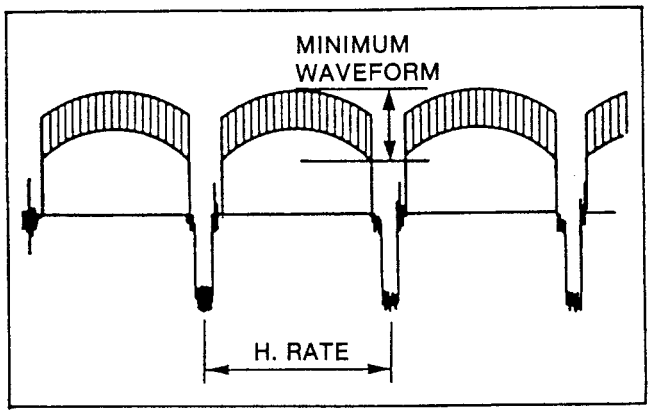

Fig. C33

21. HALL AMP ADJUSTMENT

TP	ADJ.	LENS CAP	CHART
TP518 TP516 TP521 TP520	VR532 VR533	NO	GRAY SCALE CHART
M. EQ.		SPEC.	
D.V.M.			

Note :
TP516,TP518,TP520,TP521,VR532,VR533 : Process C.B.A.

(1) Connect the jumper wire between TP516 and TP521 to iris close.
(2) Adjust the VR532 (Hall amp control) so that the voltage at TP518 becomes 1.74V +− 0.02V.
(3) Exchange the connecting jumper wire from TP521 to TP520 to iris open. (Now connecting TP516 and TP520.)
(4) Adjust the VR533 (Hall amp control) so that the voltage at TP518 becomes 3.72V +− 0.05V.
(5) Confirm the voltage at TP518 by connecting a jumper wire between TP516 and TP521 then if it is out of specification, repeat this adjustment form first item.
(Voltage at TP518 is control by both VR, so even if iris close voltage has adjusted by VR532 correctly, it is changed when iris open voltage is adjusted by VR533. Please consider changing level when you adjust.)

AUTO FOCUS SECTION

Note :
PREPARATION
Camera zoom is positioned at the end of TELE side.

22. AF GATE ADJUSTMENT

TP	ADJ.	IRIS CAP	CHART
TP702 TP703	C703	NO	
M. EQ.		SPEC.	
OSCILLOSCOPE		T=9.6±0.4μsec.	

Note :
TP702,TP703,C703 : Auto Focus C.B.A.

(1) Connect the oscilloscope to TP702 and TP703 by dual trace mode.
(2) Adjust the C703 (AF Gate control) so that the phase difference becomes 9.6usec +− 0.4usec.

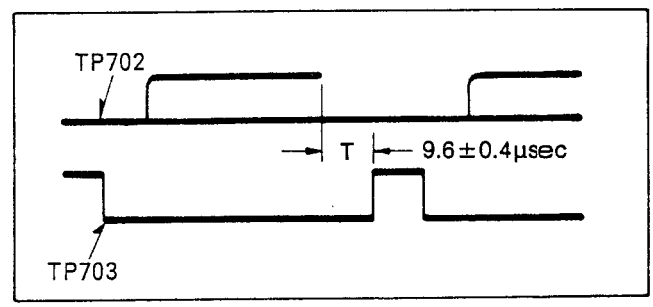

Fig. C34

23. BIMOLF GAIN CONTROL ADJUSTMENT

TP	ADJ.	LENS CAP	CHART
TP704	VR703	YES	
M. EQ.		SPEC.	
OSCILLOSCOPE		A=11V±0.5Vp-p	

Note :
TP704,VR703 : AF C.B.A.

(1) Set the Focus selector to "MANUAL".
(2) Cover the camera lens with the lens cap.
(3) Connect the oscilloscope to TP704.
(4) Adjust the VR703 (Bimolf gain control) so that the signal level becomes 11V +−0.5Vp−p.

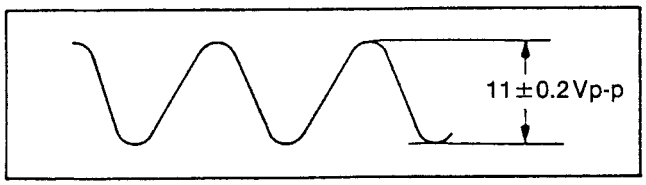

Fig. C35

24. AF VH FREQUENCY ADJUSTMENT

TP	ADJ.	IRIS CAP	CHART
TP705	C737	NO	WHITE/GRAY CHART
M. EQ.		SPEC.	
OSCILLOSCOPE		A=2.80V±0.05V DC-RANGE	

Note :
TP705,TP710,C737 : Auto Focus C.B.A.
TP516,TP520 : Process C.B.A.

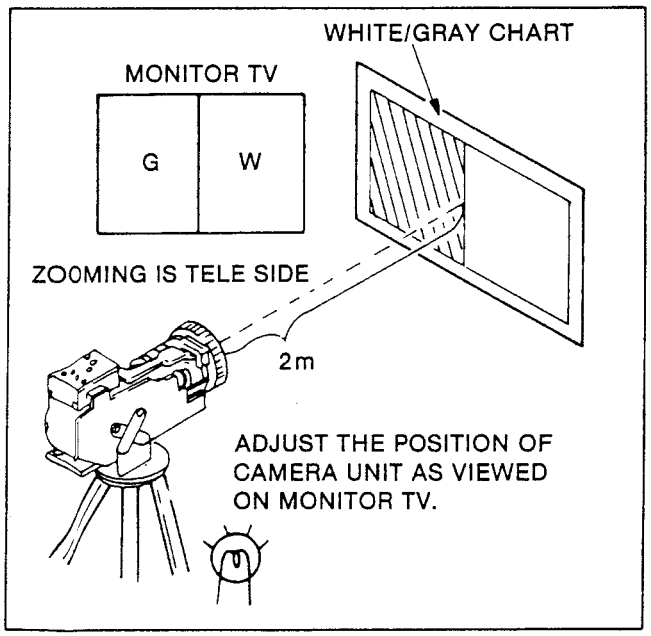

Fig. C36

(1) Set the Focus selector to "AUTO".
(2) Connect the jumper wire between TP516 and TP520 to iris open.
(3) Aim the camera at White/Gray Chart .
(4) Adjust the lighting condition so that level at TP710 becomes 180mV +- 10mVp-p as shown in Fig. C37.

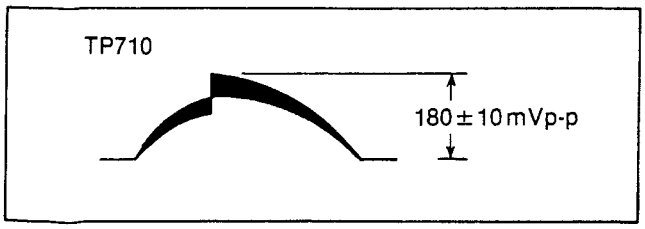

Fig. C37

(5) Adjust the C737 (AF VH Frequency control) so that DC level at TP705 becomes 2.8V +- 0.05V.

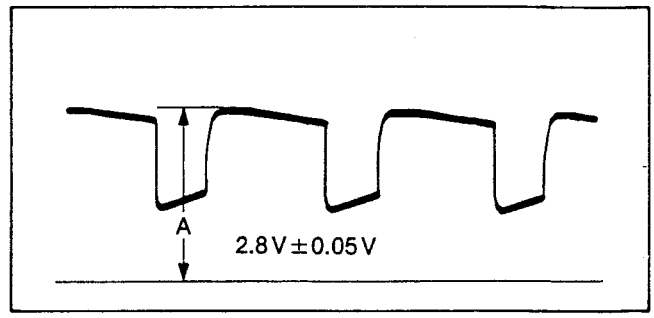

Fig. C38

2-4-2. ELECTRICAL ADJUSTMENT FOR E.V.F. SECTION

Note :
PREPARATION
Adjustment of camera section must be completed.
Electric ' View Finder must be connected to camera unit.

1. H-OSC ADJUSTMENT

TP	ADJ.	LENS CAP	CHART
Pin 2 of P701	VR702	NO	BALL CHART
M. EQ.		SPEC.	
FREQUENCY COUNTER		15.9kHz±0.1kHz	

Note :
P701,VR702 : E.V.F. C.B.A.

(1) Connect the frequency counter to Pin2 of P701.
(2) Adjust the VR702 (H-OSC control) so that the frequency becomes 15.9KHz +- 0.1KHz.

2. CENTERING ADJUSTMENT

Note :
Deflection York, Centering Magnet : CRT

(1) Aim the camera at the Ball Chart
(2) Adjust the Deflection york and Centering magnet so that the picture on CRT is centred.

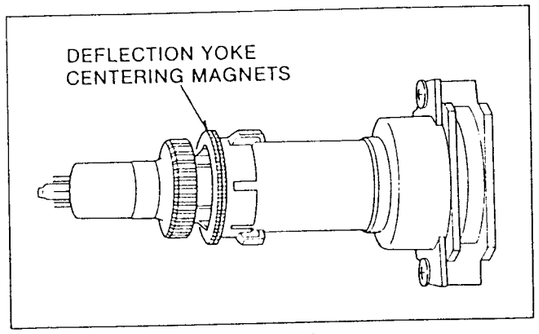

Fig. C39

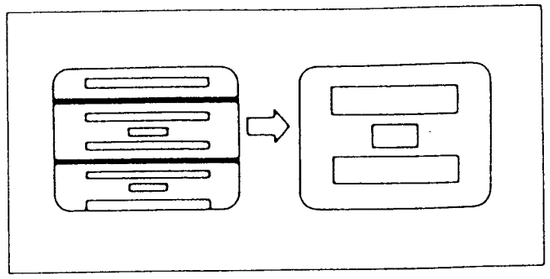

Fig. C40

3. FOCUS ADJUSTMENT

TP	ADJ.	LENS CAP	CHART
	VR704	NO	BALL CHART
M. EQ.		SPEC.	
VIEWFINDER		BEST RESOLUTION	

Note :
VR704 : E.V.F. C.B.A.

(1) Aim the camera at the Ball Chart.
(2) Adjust the VR704 so that the picture on CRT becomes best resolution.

4. V. SIZE ADJUSTMENT

TP	ADJ.	LENS CAP	CHART
	VR701	NO	GRAY SCALE CHART
M. EQ.		SPEC.	
VIEWFINDER		VERTICAL SIZE IS FIXED	

Note :
VR701 : E.V.F. C.B.A.

(1) Aim the camera at the Gray Scale Chart.
(2) Adjust the VR701 (Vertical size control) so that the vertical size becomes correct and picture does not rolling.

5. BRIGHTNESS ADJUSTMENT

TP	ADJ.	LENS CAP	CHART
	VR705	NO	GRAY SCALE CHART
M. EQ.		SPEC.	
VIEWFINDER		NATURAL GRADATION	

Note :
VR705 : E.V.F. C.B.A.

(1) Aim the camera at the Gray Scale Chart.
(2) Adjust the VR705 (Brightness control) so that the brightness for black and white bar on the CRT becomes same as the TV monitor brightness.

LOCATION OF TEST POINTS & CONTROLS (1)

PROCESS C.B.A.

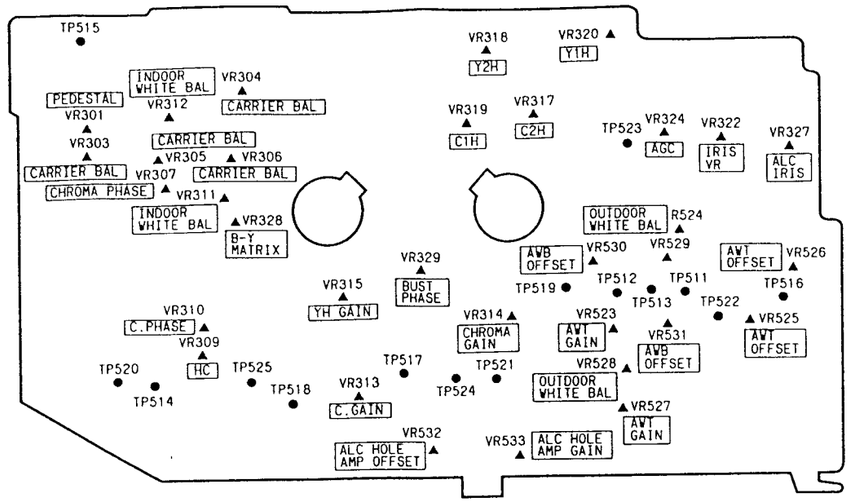

AUTO FOCUS C.B.A.

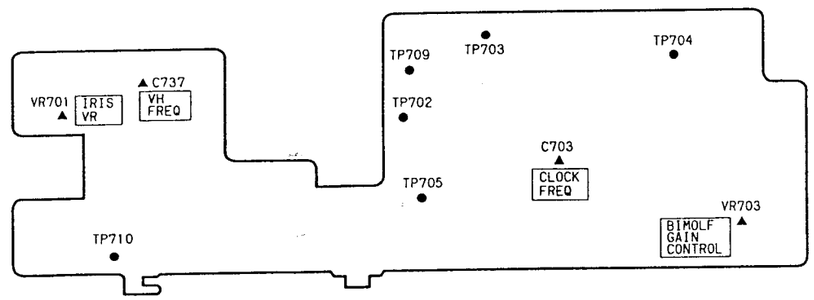

SENSOR C.B.A.

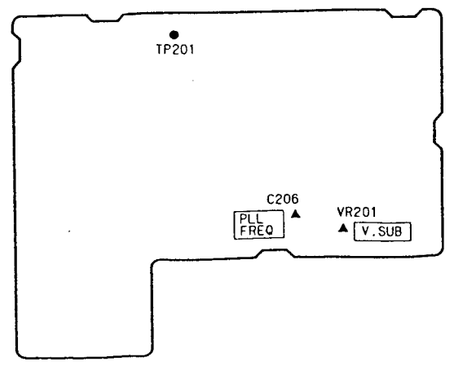

E.V.F. C.B.A.

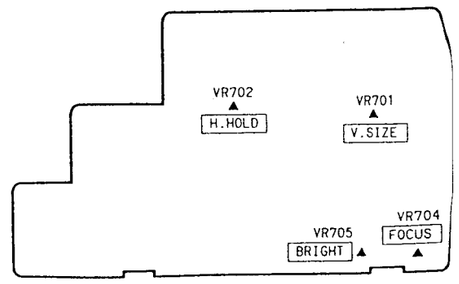

LOCATION OF TEST POINTS & CONTROLS (2)

MAIN C.B.A.

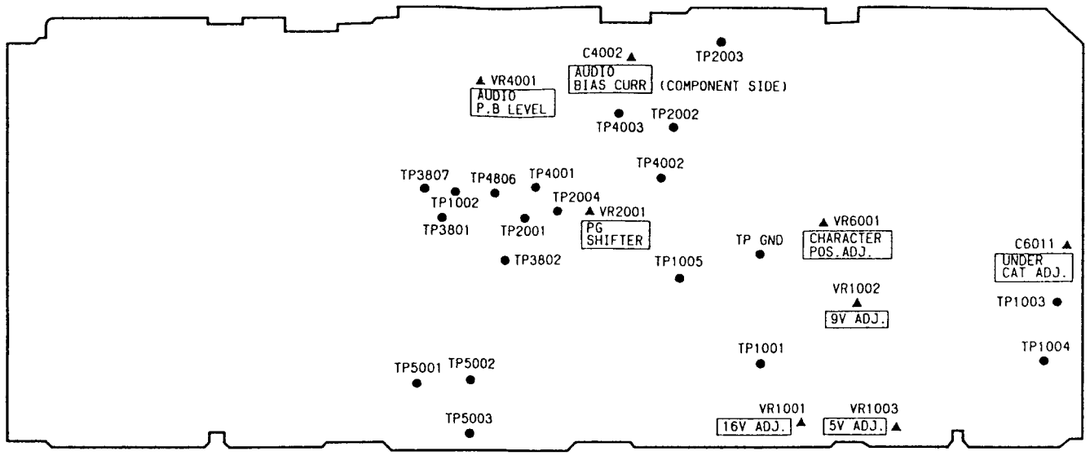

LUMINANCE & CHROMINANCE C.B.A.

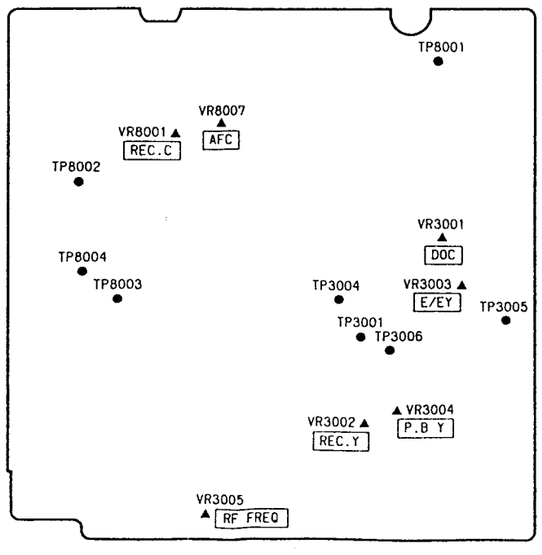

2-4-3. ELECTRICAL ADJUSTMENT FOR VTR SECTION

The following equipments are required for adjustment of the VHS Movie NV-M1000EN/EM.

(1) V.T.V.M. (Vacuum Tube Volt Meter)
D.V.M. (Digital Volt Meter)
(2) Dual trace Oscilloscope
*Voltage range : 0.06 ~ 50V/div.
*Probe : 10:1 or 1:1
(3) Frequency Counter
*Frequency range : 0 ~ 10MHz
(4) Signal Generator (Sine wave)
*Frequency range : 0 ~ 10MHz
(5) Video Sweep Generator
(6) Colour monitor TV
(7) Plastic tip driver
(8) VHS Alignment tape (VFJ8125H3F)
(9) VHS Blank tape
(10) Pattern generator
(11) Y/C Separator (VFK0304)
(12) Extension cable (VFK0430)
(13) Y/C Separator connector (VFKS0074)

PREPARATION
(1) Remove the casing panels.
(2) Connect the Y/C Separator (VFK0304) to P3803 on the Main C.B.A. through Connector (VFKS0047) and extension cable (VFK0430).
(3) Supply the video signal to the unit through the Y/C Separator (VFK0304).
(4) Supply the audio signal to audio circuit through the external microphone socket.

HOW TO THE ADJUSTMENT PROCEDURES

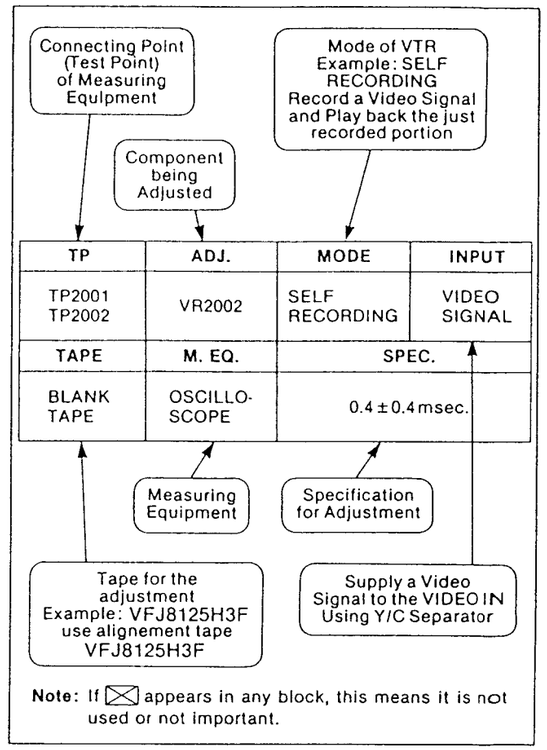

Fig. E1

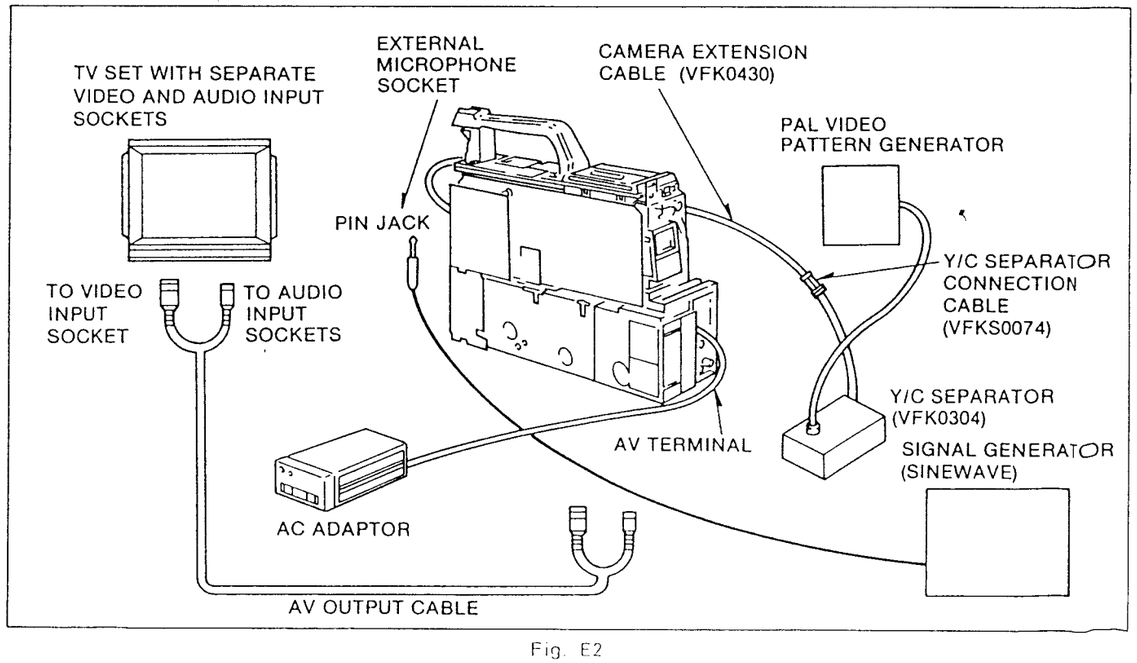

Fig. E2

POWER SECTION

1. REG. 5V ADJUSTMENT

TP	ADJ.	MODE	INPUT
TP1003	VR1003	REC/PLAY	
TAPE	**M. EQ.**	**SPEC.**	
BLANK TAPE	D.V.M.	4.96±0.025V	

Note :
Camera unit should be connected to main C.B.A. during Power REG. adjustment (REG. 5V, REG. 9V and Camera REG. 16V)

2. REG. 9V ADJUSTMENT

TP	ADJ.	MODE	INPUT
TP1002	VR1002	CAMERA RECORDING	
TAPE	**M. EQ.**	**SPEC.**	
BLANK TAPE	D.V.M.	$8.62^{+0.07V}_{-0.03V}$	

3. CAMERA REG. 16V ADJUSTMENT

TP	ADJ.	MODE	INPUT
TP1001	VR1001	REC/PLAY	
TAPE	**M. EQ.**	**SPEC.**	
BLANK TAPE	D.V.M.	15.2±0.3V	

Note :
REG. 5V, REG 9V adjustment should be completed before this adjustment.

SERVO SECTION

4. PG SHIFTER ADJSUTMENT

TP	ADJ.	MODE	INPUT
TP2001 VIDEO OUT	VR2001	PLAY	
TAPE	**M. EQ.**	**SPEC.**	
ALIGNMENT TAPE (VFJ8125H3F)	OSCILLO-SCOPE	6.5H±0.5H	

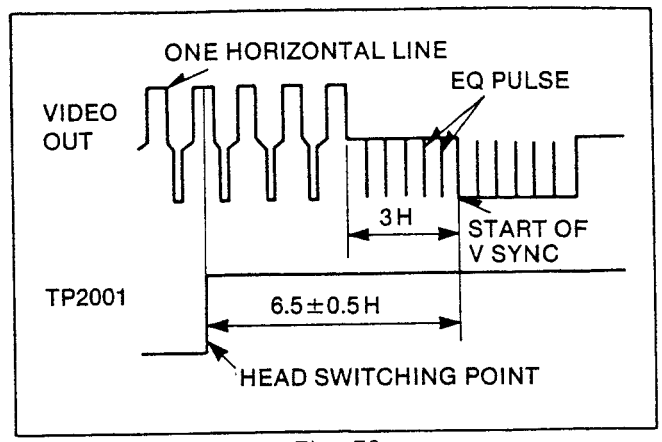

Fig. E3

LUMINANCE & CHROMINANCE SECTION

5. E-E LEVEL ADJSUTMENT

TP	ADJ.	MODE	INPUT
VIDEO OUT	VR3003	STOP	COLOUR BAR
TAPE	**M. EQ.**	**SPEC.**	
	OSCILLO-SCOPE	A=1.0±0.05 Vp-p (75Ω Terminated)	

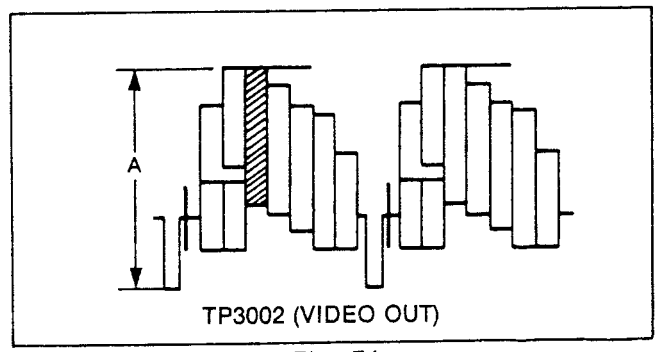

Fig. E4

6. AFC ADJUSTMENT

TP	ADJ.	MODE	INPUT
TP8004	VR8007	STOP	
TAPE	**M. EQ.**	**SPEC.**	
	FREQ. COUNTER	623±15kHz	

(1) Connect the jumper wire among TP8002, TP8003 and TP8001 (GND).
(2) Connect the frequency counter to TP8004.
(3) Adjust the VR8007 so that the frequency becomes 623KHz +- 15KHz.

7. REC CHROMA LEVEL ADJUSTMENT

TP	ADJ.	MODE	INPUT
P5003-2 (GND) P5003-1 (HOT)	VR8001	REC/PLAY	COLOUR BAR (W/WHITE WINDOW)
TAPE	**M. EQ.**	**SPEC.**	
BLANK TAPE	OSCILLO-SCOPE	44±5mVp-p	

(1) Connect the oscilloscope to TP5003 (HOT) and TP5002 (GND).
(2) Eliminate luminance recording current by turning VR3002.
(3) Adjust VR8001 so that the Chrominance recording current become 44mV+−5mVp−p.

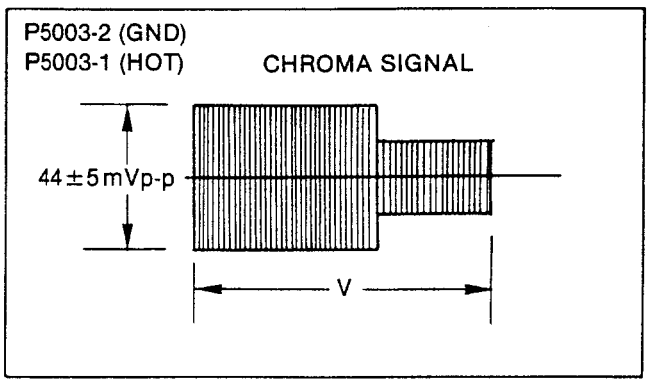

Fig. E5

8. LUMINANCE RECORDING CURRENT ADJUSTMENT

TP	ADJ.	MODE	INPUT
P5003-2 (GND) P5003-1 (HOT)	VR3002	REC/PLAY	VIDEO SIGNAL
TAPE	**M. EQ.**	**SPEC.**	
BLANK TAPE	OSCILLO-SCOPE	150mV±5mVp-p	

(1) Connect the oscilloscope to TP5003 (HOT) and TP5002 (GND).
(2) Adjust the VR3002 so that the luminance recording current becomes 150+−5mVp−p.

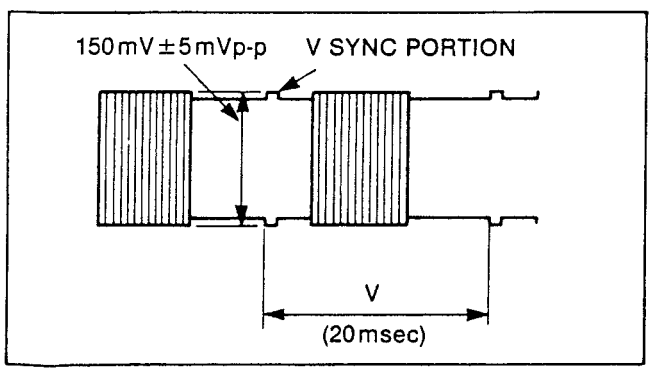

Fig. E6

9. LINE NOISE CANCEL ADJUSTMENT

TP	ADJ.	MODE	INPUT
TP3004	VR3001	SELF RECORDING	
TAPE	**M. EQ.**	**SPEC.**	
BLANK TAPE	OSCILLO-SCOPE	Minimum as possible	

(1) Record the video signal.
(2) Connect the oscilloscope to TP3004.
(3) Playback the just recorded portion.
(4) Adjust the VR3001 so that the level between sync tip and white peak becomes minimum as possible.

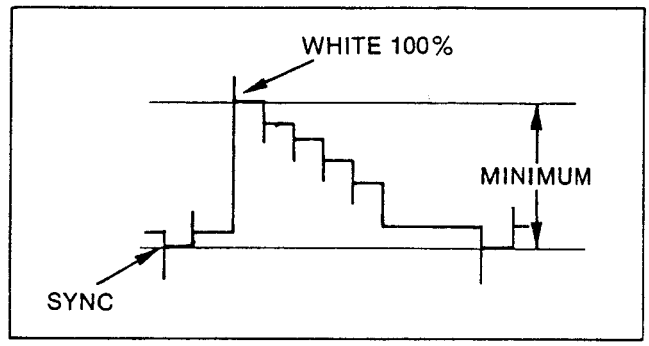

Fig. E7

10. VIDEO PLAYBACK LEVEL ADJUSTMENT

TP	ADJ.	MODE	INPUT
VIDEO OUT	VR3004	SELF RECORDING	COLOUR BAR
TAPE	**M. EQ.**	**SPEC.**	
BLANK TAPE	OSCILLO-SCOPE	A=1.0±0.05Vp-p	

(1) Record the colour bar and playback the just recorded portion.
(2) Connect the oscilloscope to video out.
(3) Adjust the VR3004 so that the out put level becomes 1.0V +− 0.05Vp−p.

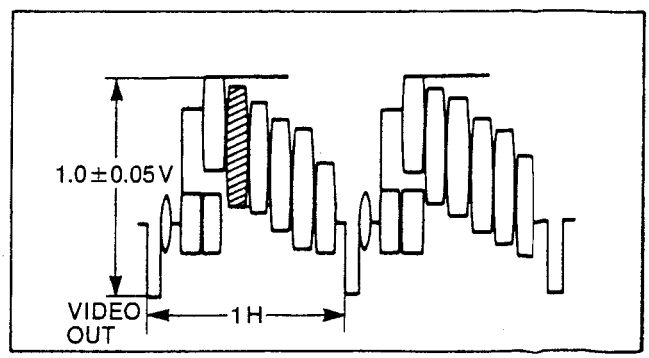

Fig. E8

11. HEAD AMP FREQUENCY RESPONSE ADJUSTMENT

TP	ADJ.	MODE	INPUT
VIDEO OUT	VR3005	SELF RECORDING	VIDEO SWEEP SIGNAL
TAPE	**M. EQ.**	**SPEC.**	
BLANK TAPE	VIDEO SWEEP/ OSCILLO-SCOPE	A: 0±2dB (80~125%)	

Note :
Edit switch should be "OFF"

(1) Set the video sweep generator as shown in Fig. E9.

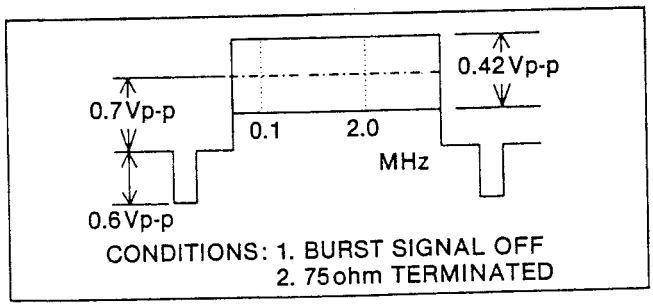

Fig. E9

(2) Record the sweep signal and playback just recorded portion.
(3) Adjust the VR3005 so that the level at 2MHz becomes 0 +- 2dB comparing with the level at 0.1MHz as shown in Fig. E10.

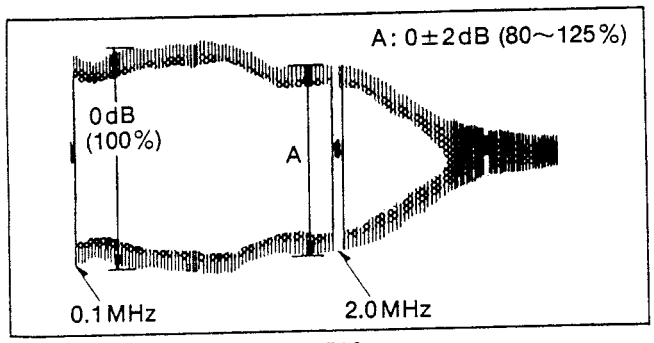

Fig. E10

AUDIO SECTION

12. AUDIO PLAYBACK LEVEL ADJUSTMENT

TP	ADJ.	MODE	INPUT
AUDIO OUT	VR4001	SELF RECORDING	1kHz AUDIO 0dB SIGNAL/ VIDEO SIGNAL
TAPE	**M. EQ.**	**SPEC.**	
BLANK TAPE	SIGNAL GENERATOR/ D.V.M.	−8.0dBV±1dB	

(1) Supply the audio signal (1KHz/−10dB Sine wave) to audio circuit through external microphone socket.
(2) Record the audio signal and playback just recorded portion.
(3) Adjust VR4001 so that the audio level becomes −8dBV +- 1dB.

13. AUDIO BIAS CURRENT ADJUSTMENT

TP	ADJ.	MODE	INPUT
TP4002 (HOT) TP4003 (GND)	VR4002	REC/PLAY	
TAPE	**M. EQ.**	**SPEC.**	
BLANK TAPE	D.V.M.	2.7mVrms±0.1mVrms	

SYSTEM CONTROL SECTION

14. UNDER CUT ADJUSTMENT

TP	ADJ.	MODE	INPUT
Pin 6 of P6011	VR6001	REC/PLAY	
TAPE	**M. EQ.**	**SPEC.**	
BLANK TAPE	OSCILLO-SCOPE/ DC POWER SUPPLY/ D.V.M.		

Note :
Do not connect AC adaptor, supply the DC voltage (10.5V +- 0.05V) to Pin1 of P1001 (HOT) and Pin2 of P1001 (GND).
Connect the Diode (MA165) Pin1 of P6011 for Cathode and Pin2 of P6011 for Anode to make Recording mode.

(1) Turn the Power SW to ON.
(2) Adjust the VR6001 so that the waveform is disappeared.

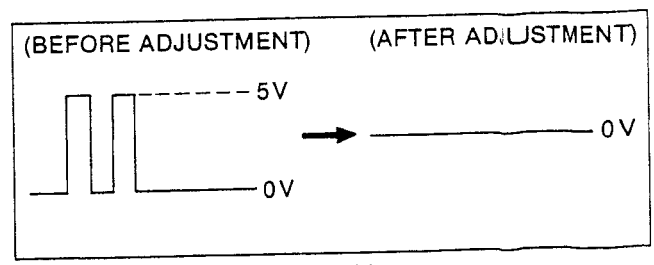

Fig. E11

15. CHARACTER POSITION ADJUSTMENT

TP	ADJ.	MODE	INPUT
VIEW FINDER	C6011	STOP	
TAPE	**M. EQ.**	**SPEC.**	
	VIEW FINDER	CHARACTER IS CENTRE	

(1) Connect the E.V.F. unit to the Main unit.
(2) Display the tape counter on the E.V.F.
(3) Adjust the C6011 so that the character comes centre.

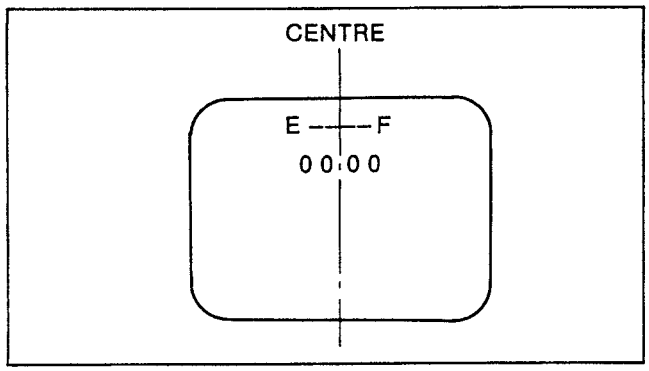

Fig.E12

SECTION 3
BLOCK DIAGRAM & SCHEMATIC DIAGRAM

3-1. CAMERA STAGE BLOCK DIAGRAM

LUMINANCE SIGNAL
PRE VIDEO SIGNAL
CHROMINANCE SIGNAL
B-Y/R-Y COMPOSITE SIGNAL
R-Y SIGN
B-Y SIGN

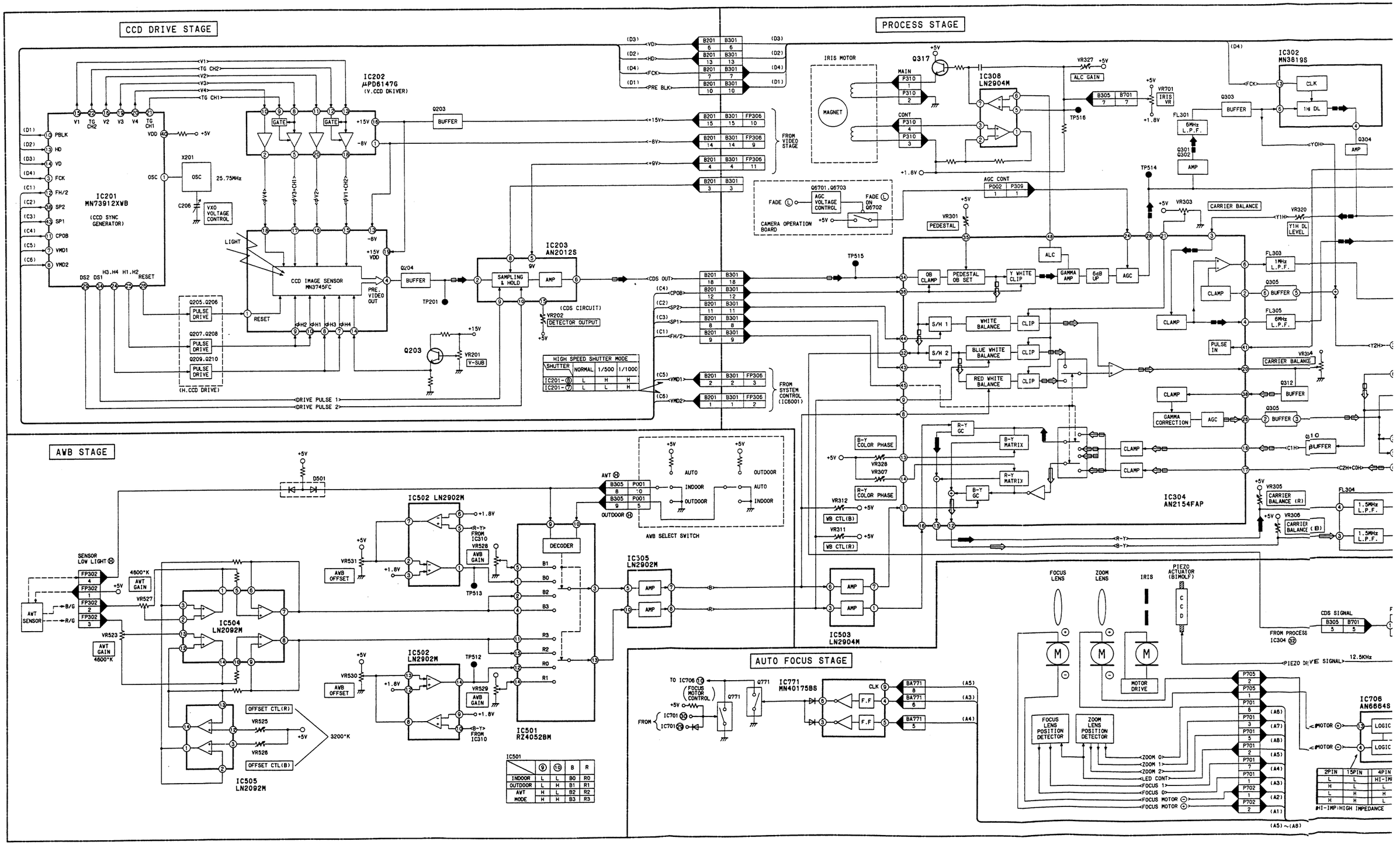

-Y SIGNAL

-Y SIGNAL

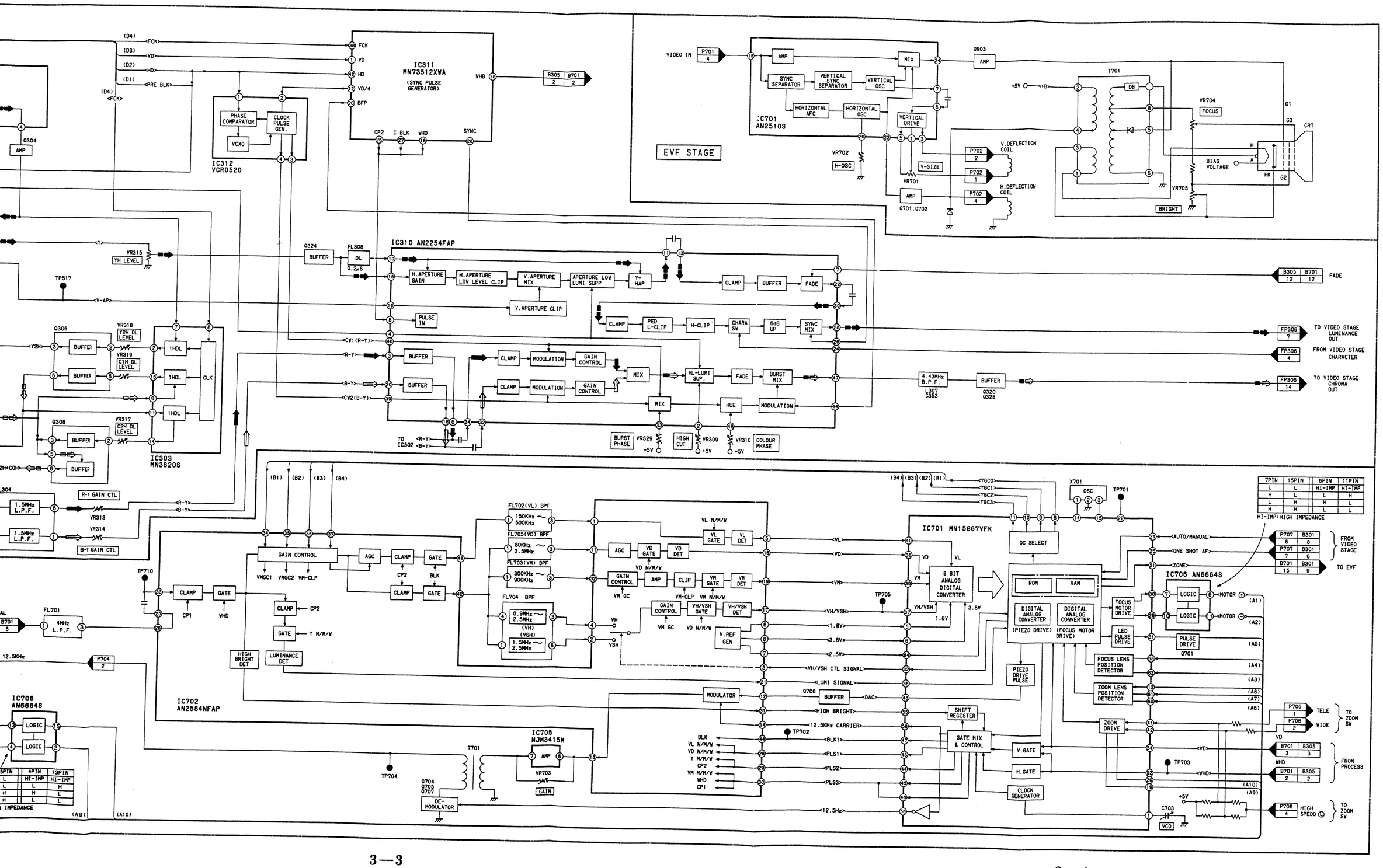

7PIN	15PIN	6PIN	11PIN
L	L	HI-IMP	HI-IMP
H	L	L	H
L	H	H	L
H	H	L	L

5PIN	4PIN	13PIN
L	HI-IMP	HI-IMP
L	L	H
H	H	L
H	L	L

IMPEDANCE

3-2. LUMINANCE & CHROMINANCE BLOCK DIAGRAM

MAIN SIGNAL PATH IN RI

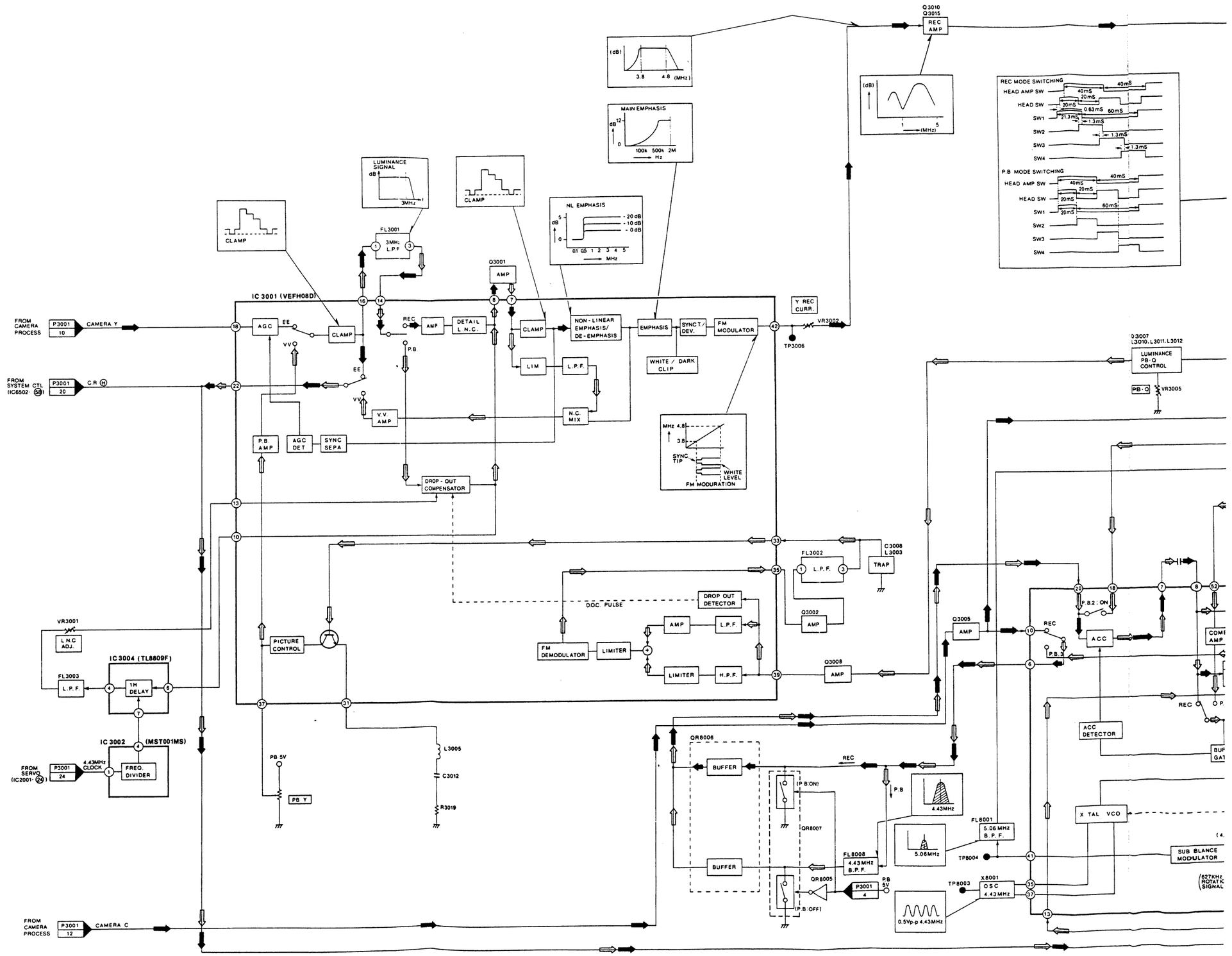

Back Page:
CAMERA STAGE Section

MAIN SIGNAL PATH IN REC MODE. ⇦ MAIN SIGNAL PATH IN PLAYBACK MODE.

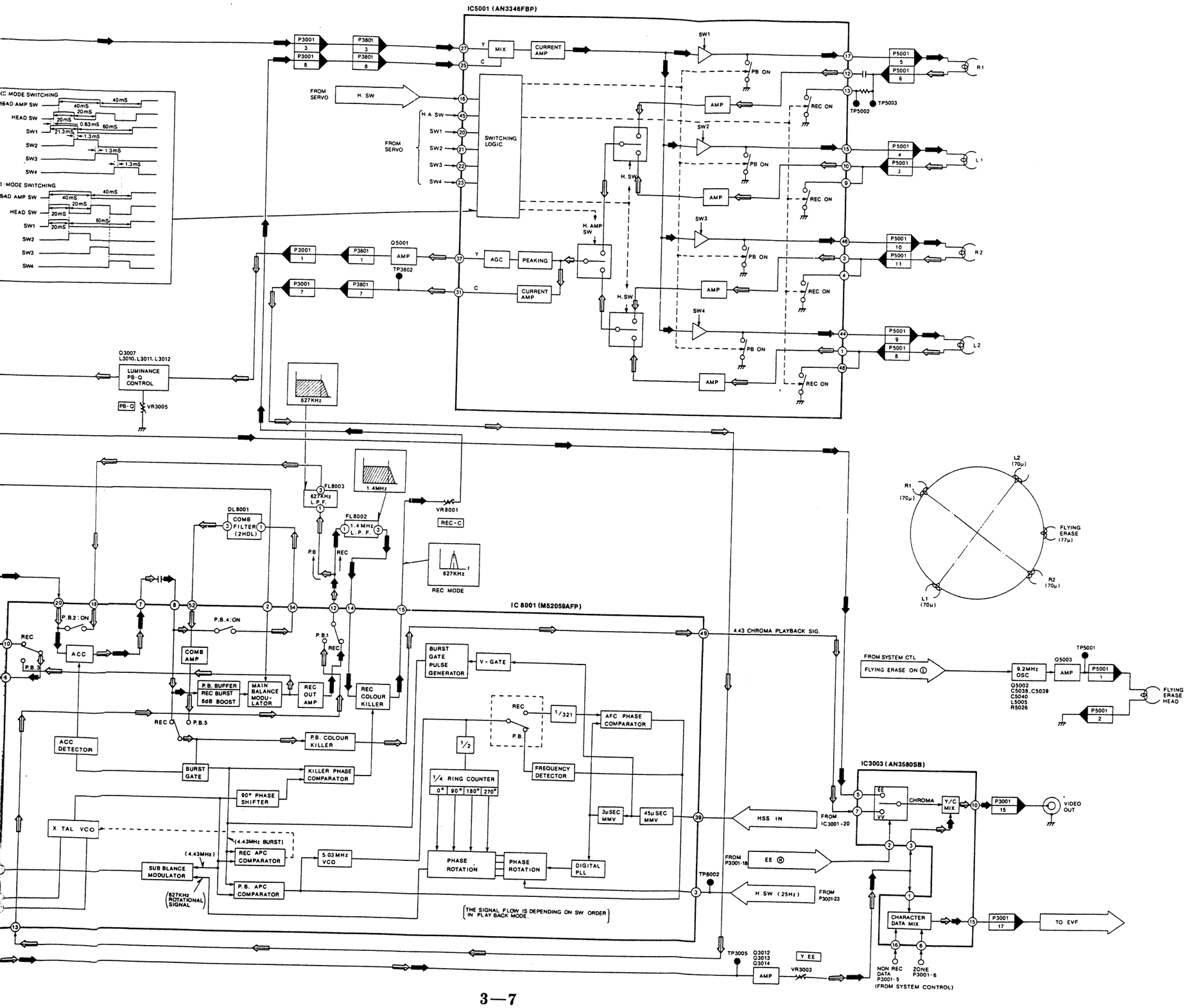

3-3. SYSTEM CONTROL BLOCK DIAGRAM

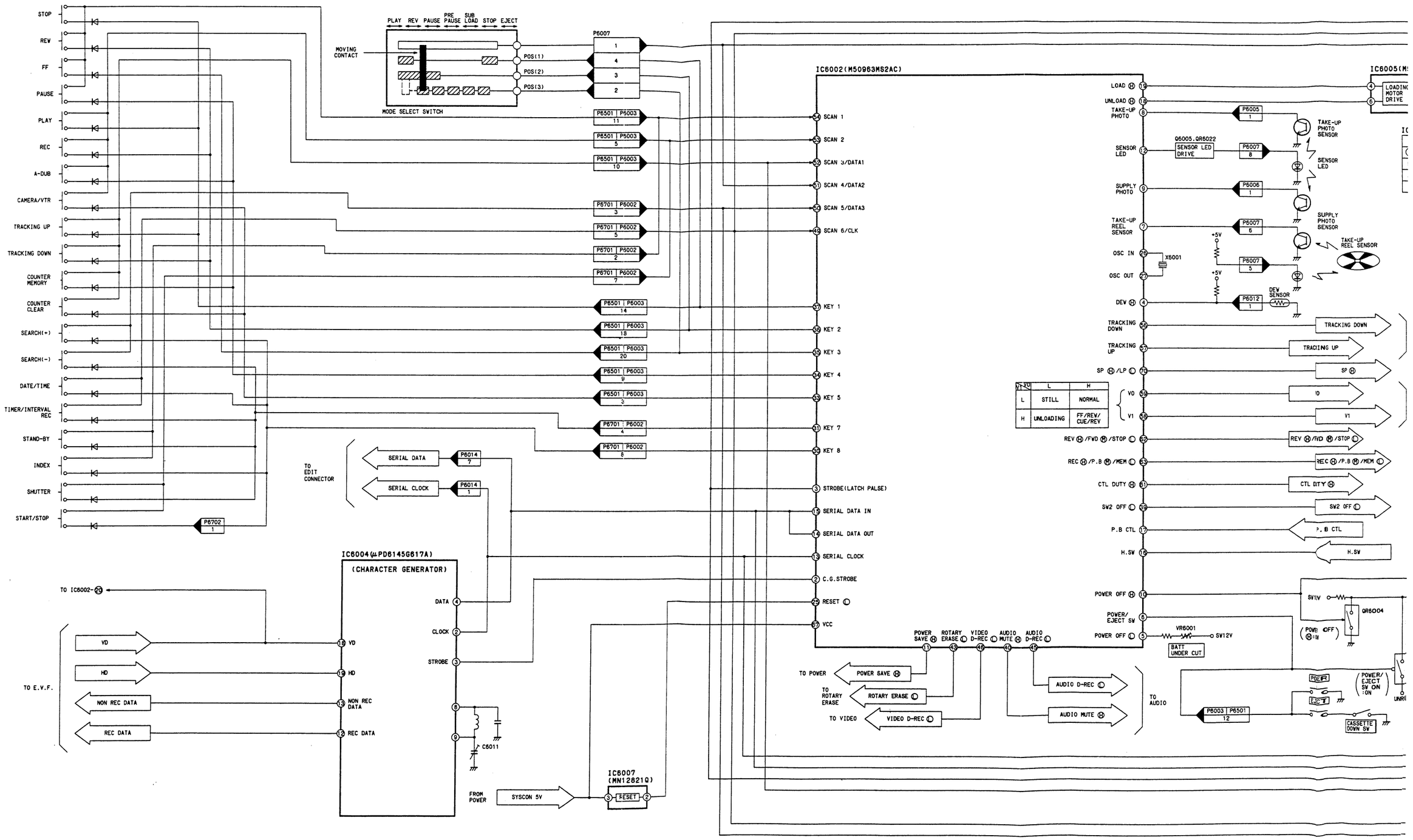

V1 \ V0	L	H
L	STILL	NORMAL
H	UNLOADING	FF/REV/ CUE/REV

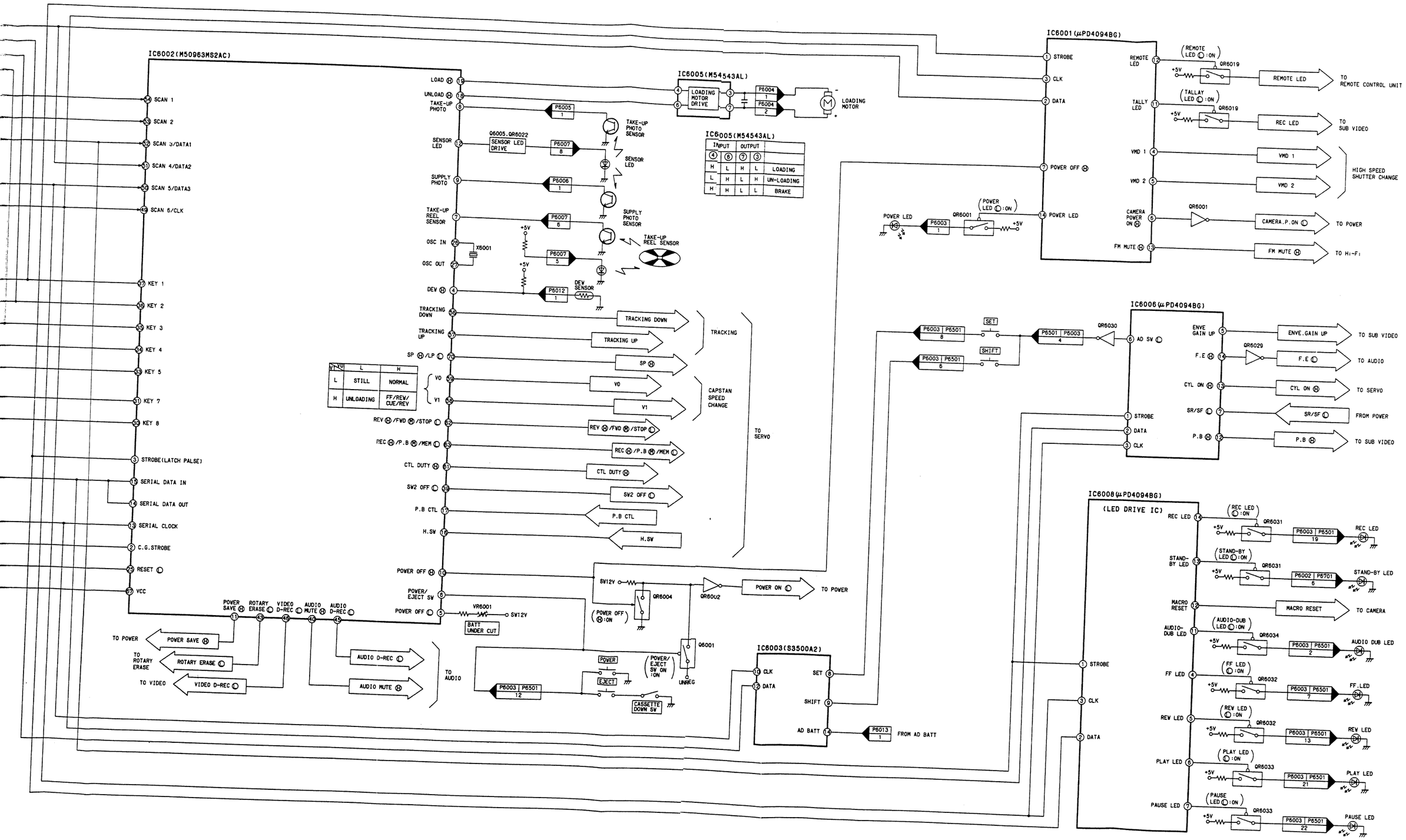

V1 \ V0	L	H
L	STILL	NORMAL
H	UNLOADING	FF/REW/ CUE/REV

INPUT ④	INPUT ⑥	INPUT ⑦	INPUT ③	OUTPUT
H	L	H	L	LOADING
L	H	L	H	UN-LOADING
H	H	L	L	BRAKE

Next Page: SERVO Section

3-4. SERVO BLOCK DIAGRAM

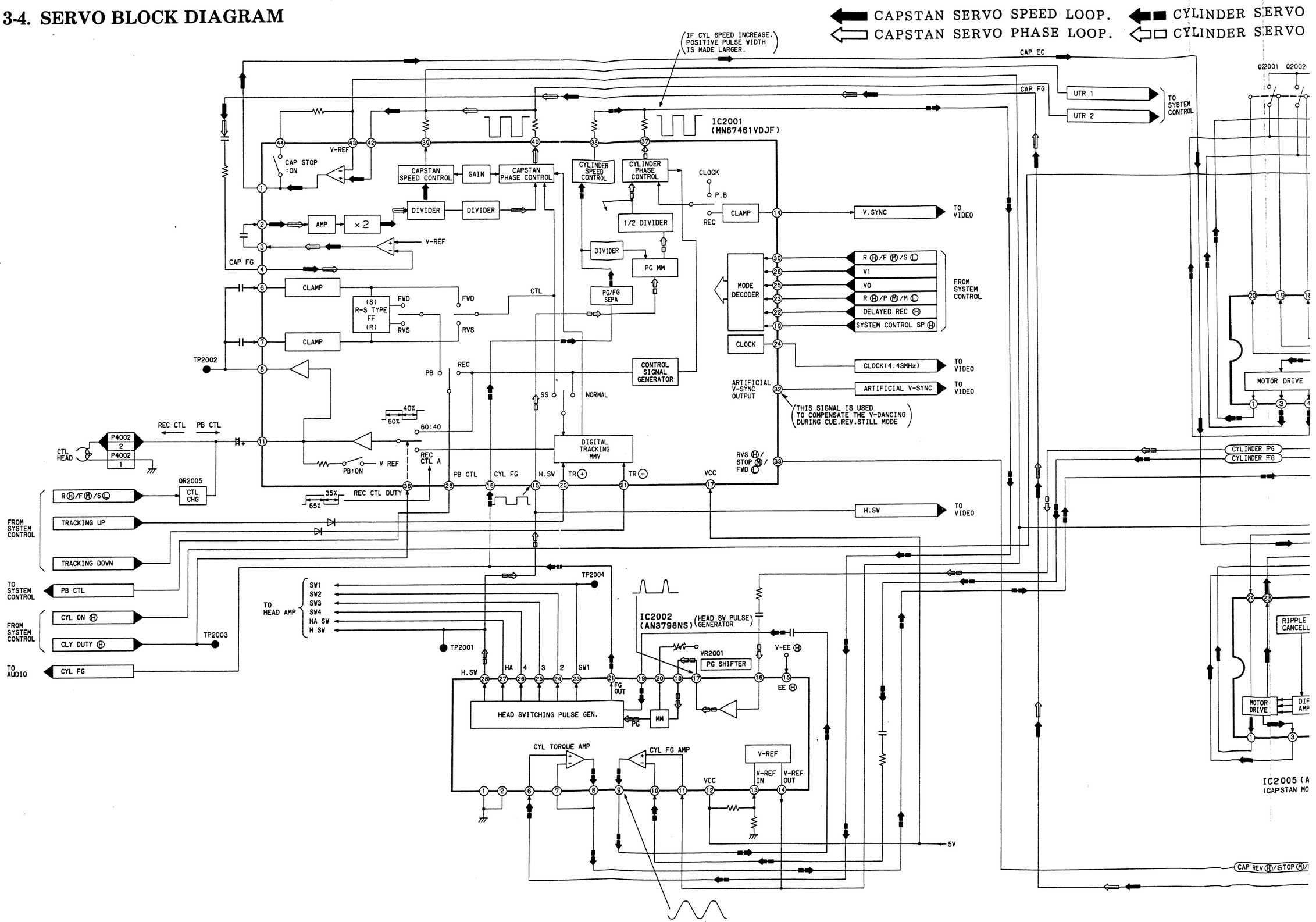

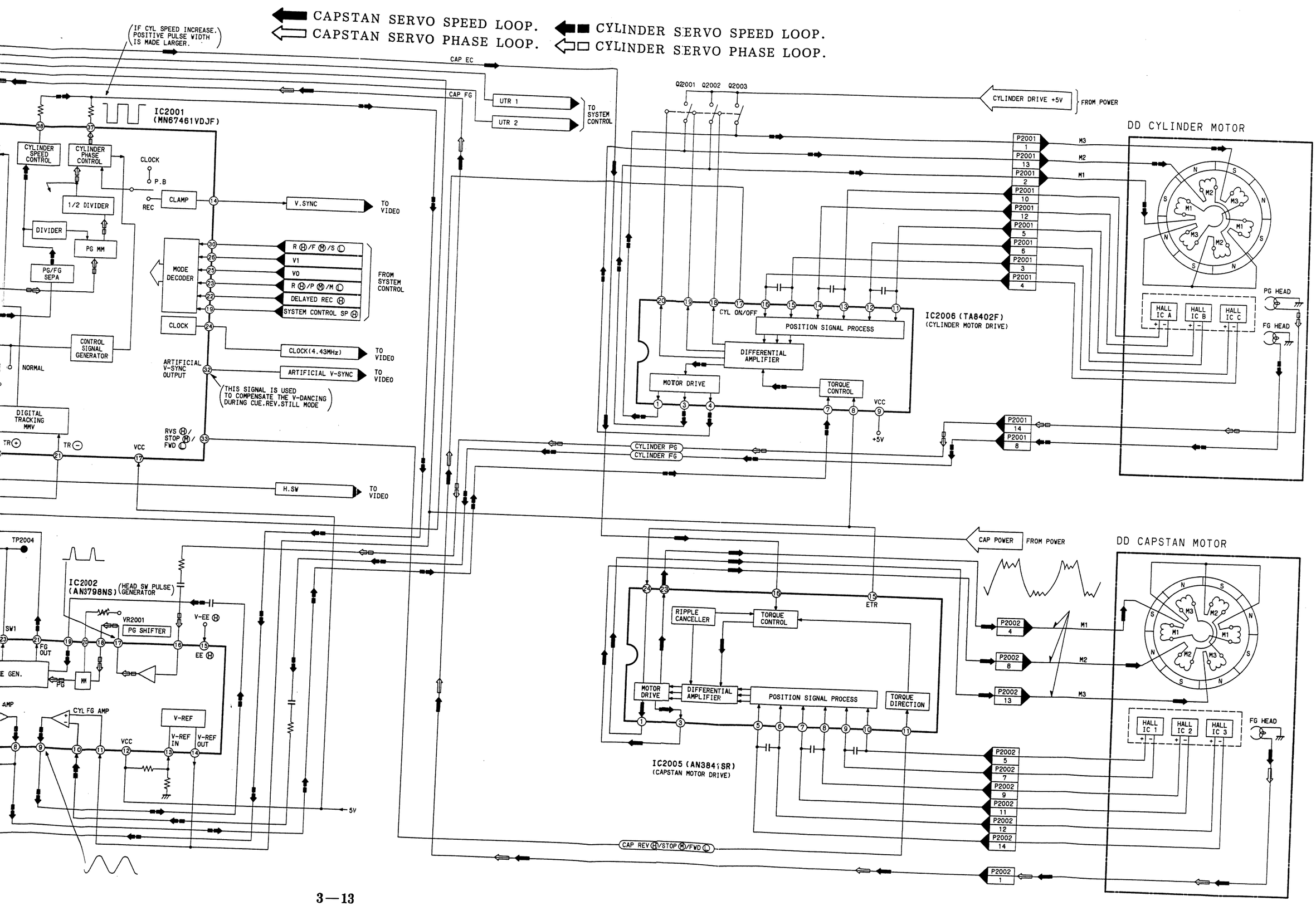
CAPSTAN SERVO SPEED LOOP.
CAPSTAN SERVO PHASE LOOP.
CYLINDER SERVO SPEED LOOP.
CYLINDER SERVO PHASE LOOP.
IF CYL SPEED INCREASE. POSITIVE PULSE WIDTH IS MADE LARGER.
IC2001 (MN67461VDJF)
CYLINDER SPEED CONTROL
CYLINDER PHASE CONTROL
CLOCK
P.B
REC
CLAMP
1/2 DIVIDER
DIVIDER
PG MM
PG/FG SEPA
MODE DECODER
CONTROL SIGNAL GENERATOR
NORMAL
ARTIFICIAL V-SYNC OUTPUT
THIS SIGNAL IS USED TO COMPENSATE THE V-DANCING DURING CUE.REV.STILL MODE
DIGITAL TRACKING MMV
TR⊕
TR⊖
VCC
RVS Ⓗ/ STOP Ⓜ/ FWD Ⓛ
V.SYNC
TO VIDEO
R Ⓗ/F Ⓜ/S Ⓛ
V1
V0
R Ⓗ/P Ⓜ/M Ⓛ
DELAYED REC Ⓗ
SYSTEM CONTROL SP Ⓗ
FROM SYSTEM CONTROL
CLOCK(4.43MHz)
ARTIFICIAL V-SYNC
H.SW
CAP EC
CAP FG
UTR 1
UTR 2
TO SYSTEM CONTROL
Q2001 Q2002 Q2003
CYLINDER DRIVE +5V
FROM POWER
DD CYLINDER MOTOR
P2001 1
P2001 13
P2001 2
P2001 10
P2001 12
P2001 5
P2001 6
P2001 3
P2001 4
M3
M2
M1
CYL ON/OFF
POSITION SIGNAL PROCESS
DIFFERENTIAL AMPLIFIER
MOTOR DRIVE
TORQUE CONTROL
IC2006 (TA8402F)
(CYLINDER MOTOR DRIVE)
HALL IC A
HALL IC B
HALL IC C
PG HEAD
FG HEAD
P2001 14
P2001 8
CYLINDER PG
CYLINDER FG
TP2004
IC2002 (AN3798NS)
(HEAD SW PULSE GENERATOR)
VR2001
PG SHIFTER
V-EE Ⓗ
EE Ⓗ
SW1
FG OUT
PG
CYL FG AMP
V-REF
V-REF IN
V-REF OUT
5V
CAP POWER
FROM POWER
DD CAPSTAN MOTOR
RIPPLE CANCELLER
TORQUE CONTROL
ETR
MOTOR DRIVE
DIFFERENTIAL AMPLIFIER
POSITION SIGNAL PROCESS
TORQUE DIRECTION
IC2005 (AN3841SR)
(CAPSTAN MOTOR DRIVE)
P2002 4
P2002 8
P2002 13
P2002 5
P2002 7
P2002 9
P2002 11
P2002 12
P2002 14
P2002 1
HALL IC 1
HALL IC 2
HALL IC 3
FG HEAD
CAP REV Ⓗ/STOP Ⓜ/FWD Ⓛ

3-5. POWER SUPPLY BLOCK DIAGRAM

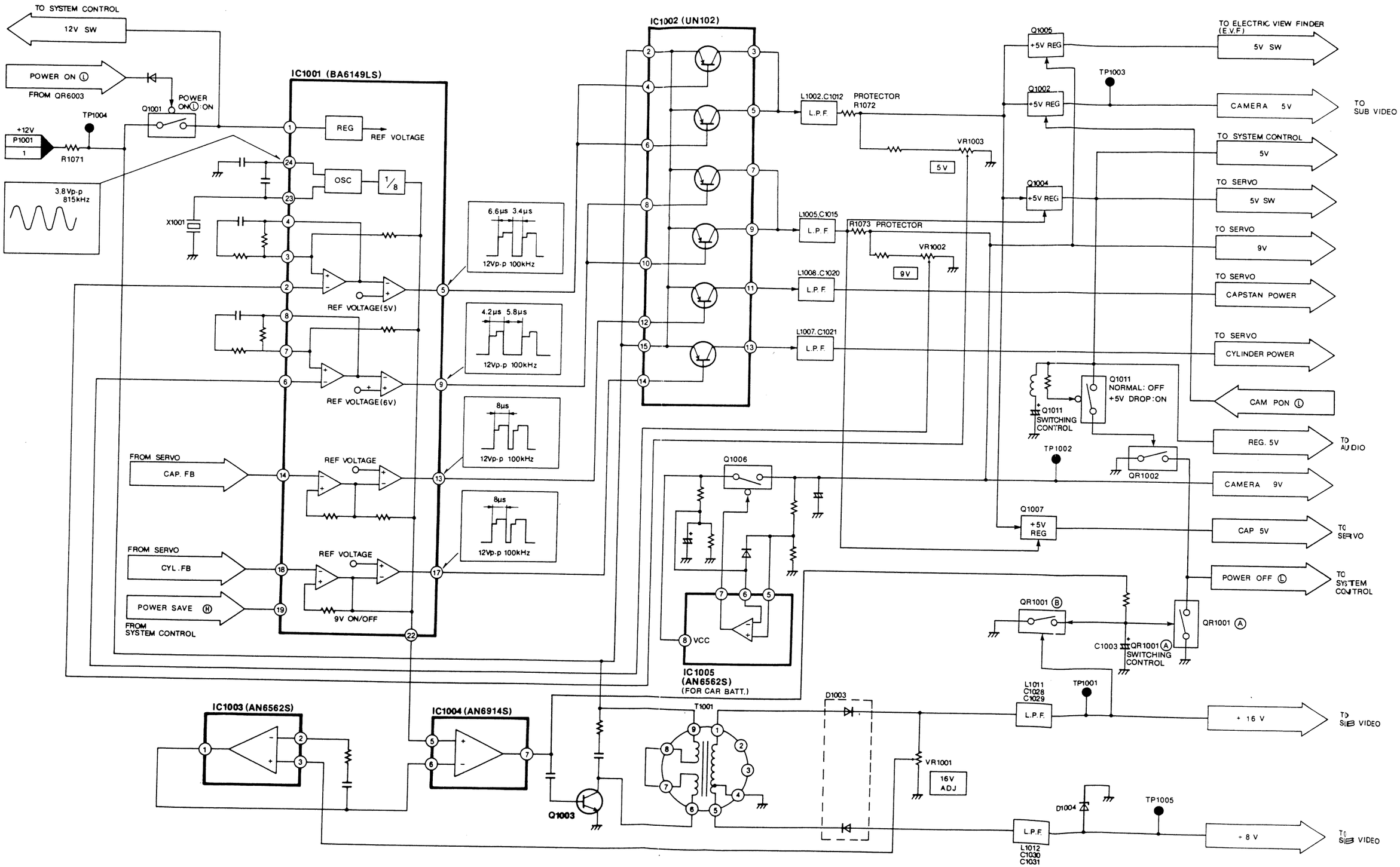

3-6. CAMERA OPERATION C.B.A. (VEP06614A)

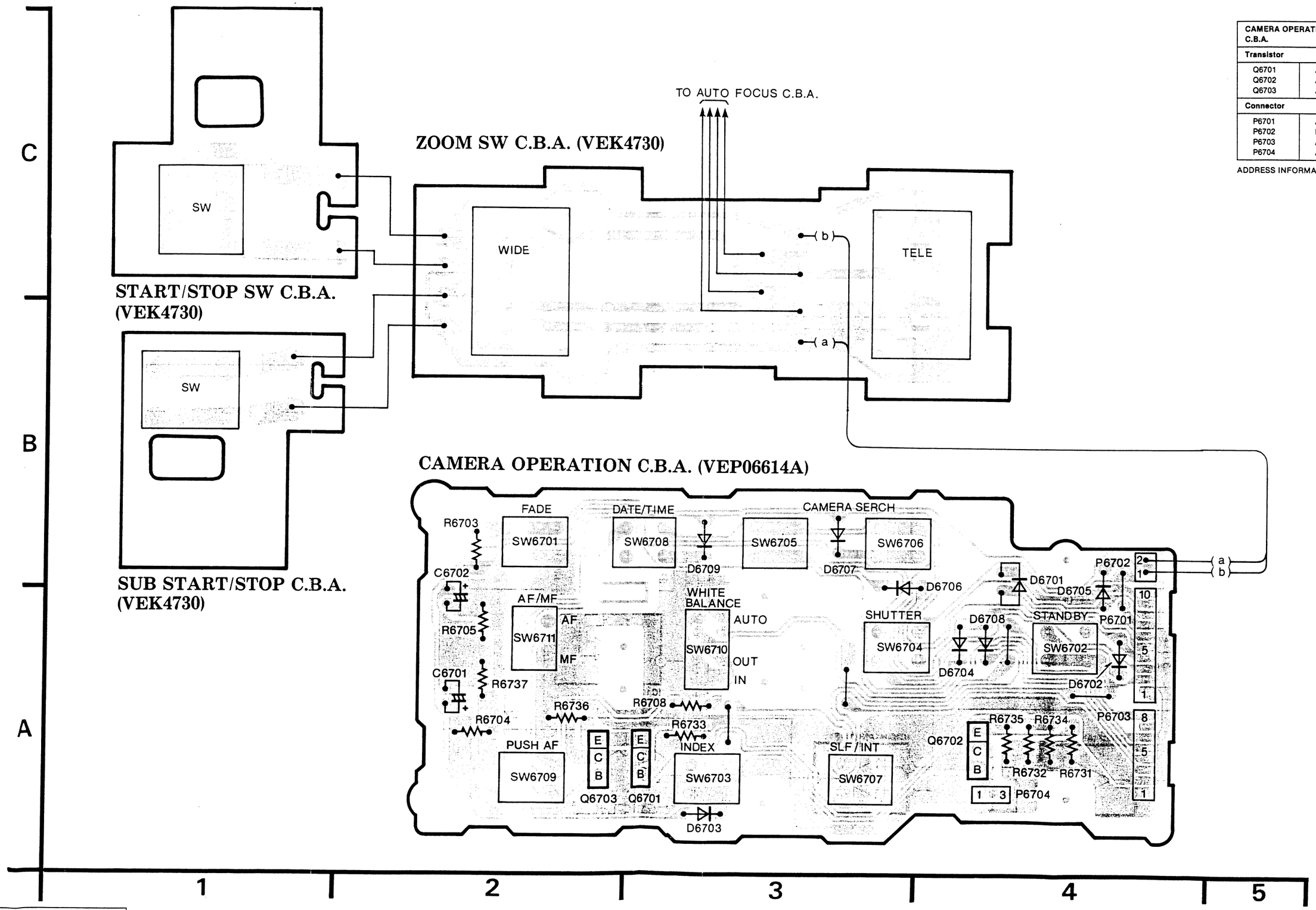

CAMERA OPERATION C.B.A.	
Transistor	
Q6701	A-3
Q6702	A-4
Q6703	A-2
Connector	
P6701	A-4
P6702	B-4
P6703	A-4
P6704	A-4

ADDRESS INFORMATION

Back Page:
POWER SUPPLY Section

3-7. CAMERA OPERATION SCHEMATIC DIAGRAM

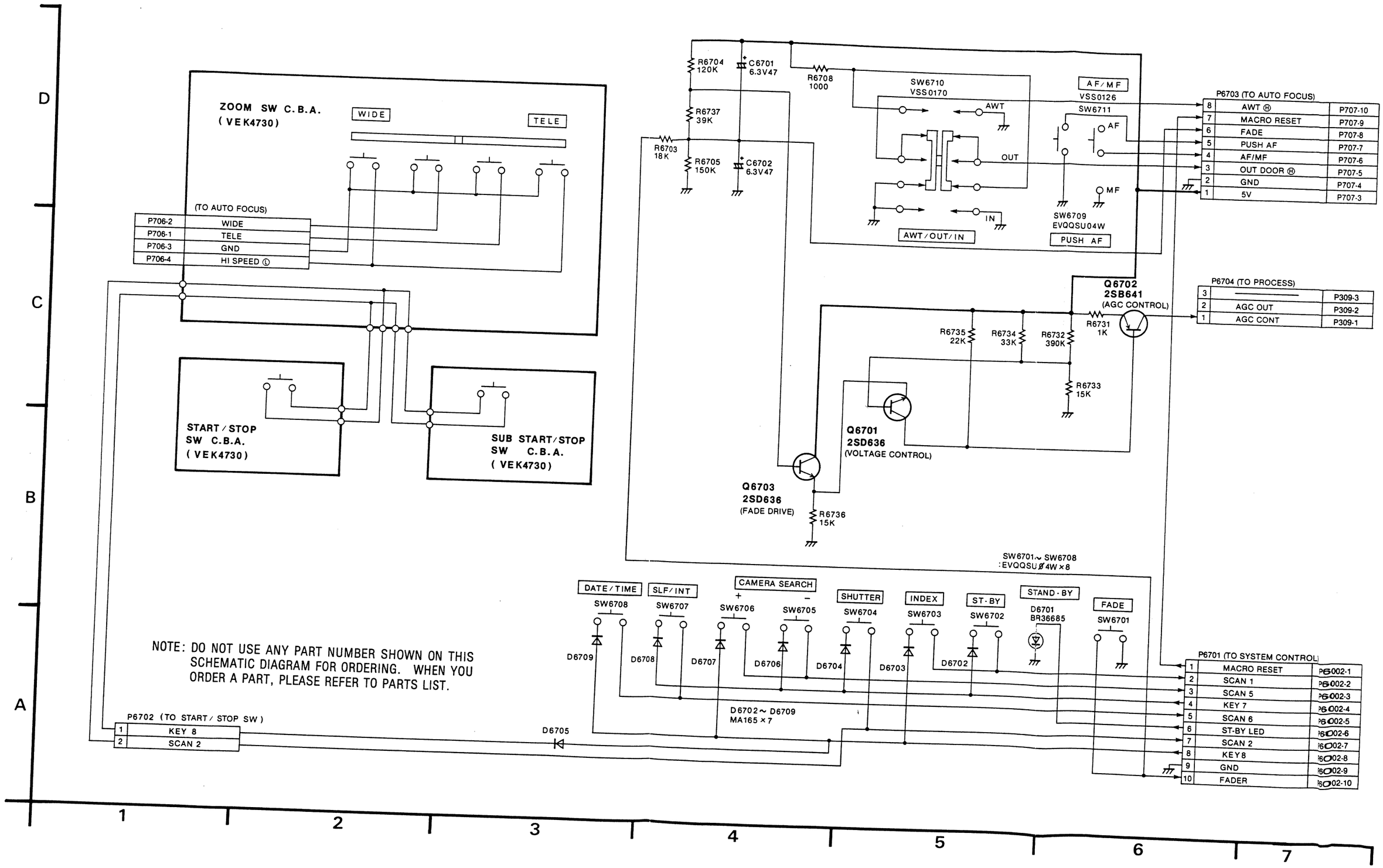

3-8. E.V.F. SCHEMATIC DIAGRAM

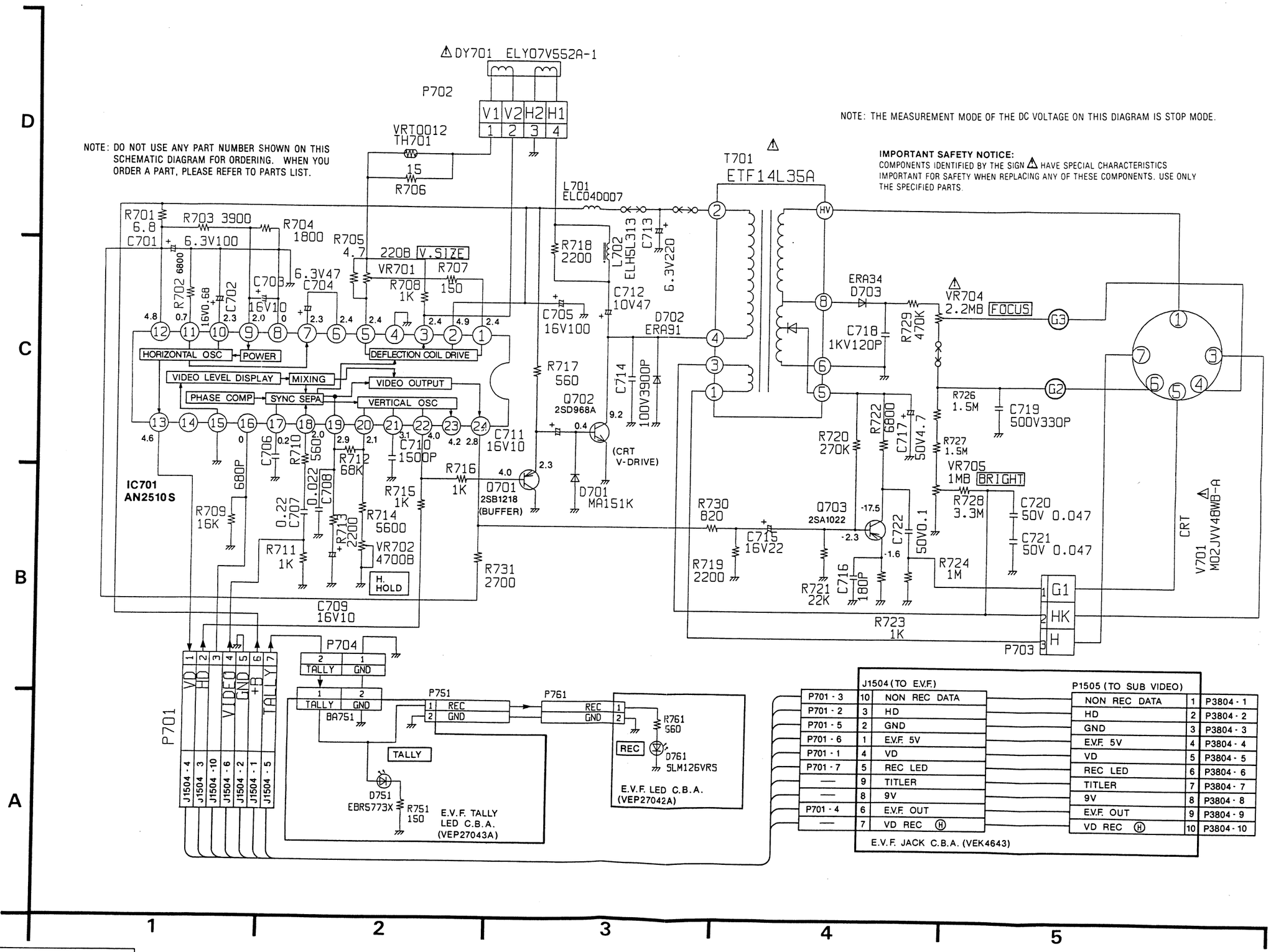

Back Page:
CAMERA OPERATION Section

3-9. E.V.F. C.B.A. (VEP27033G)

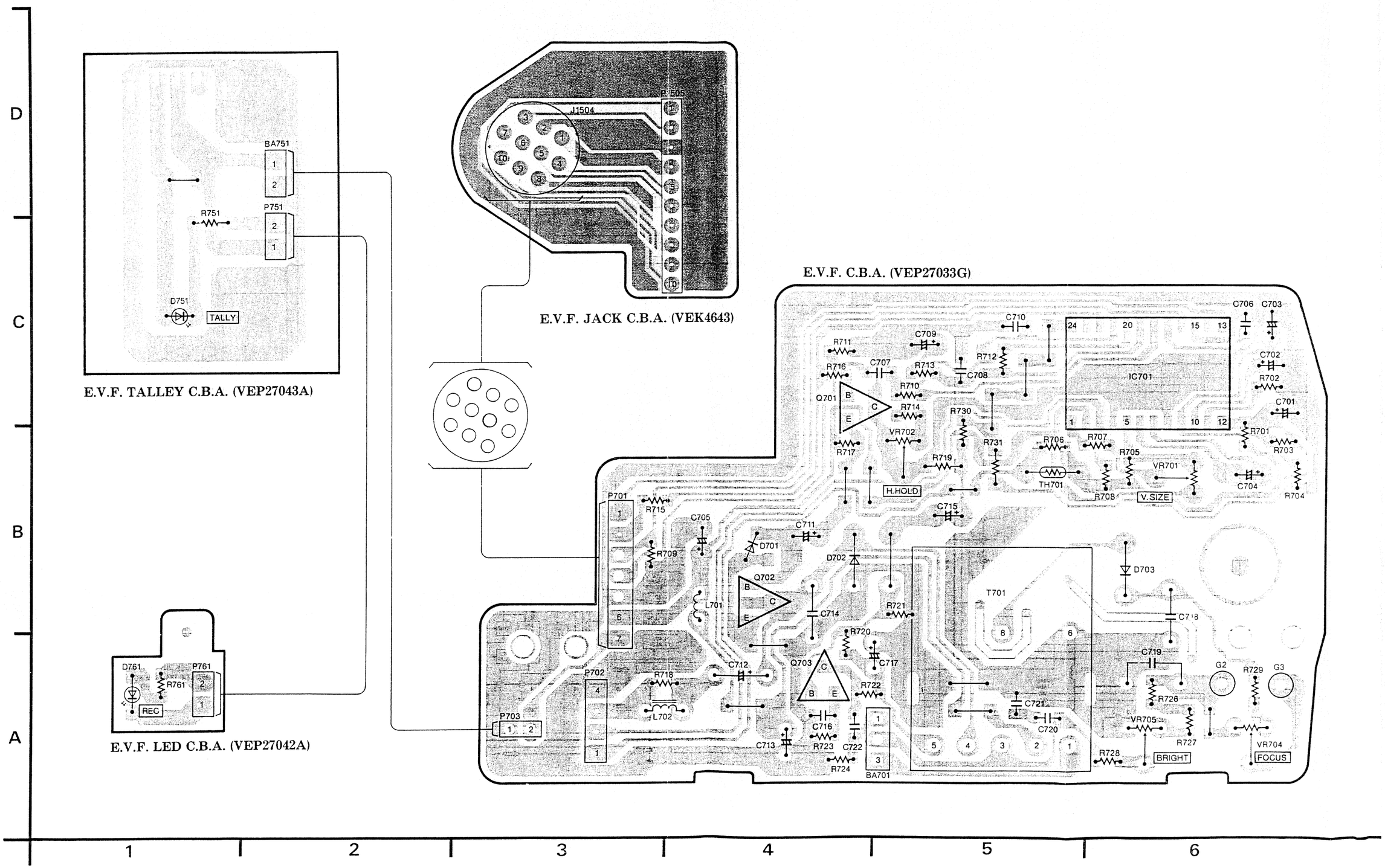

3-10. AWT SCHEMATIC DIAGRAM

E.V.F. C.B.A.	
Transistor	
Q701	C-4
Q702	B-4
Q703	A-4
Integrated Circuit	
IC701	C-6
Adjustment	
VR701	B-6
VR702	B-5
VR704	A-6
VR705	A-6
Connector	
P1505	D-3
P701	B-3
P702	A-3
P703	A-3
P751	C-2
P761	A-1
BA701	A-5
BA751	D-2
J1504	D-3

ADDRESS INFORMATION

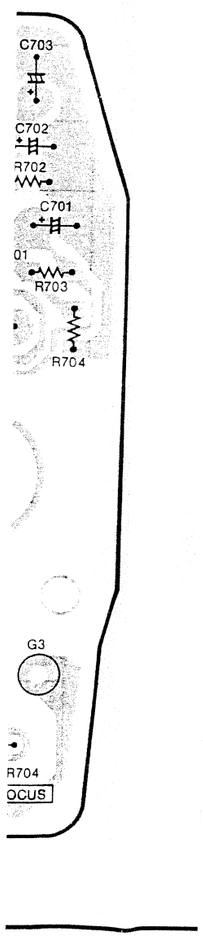

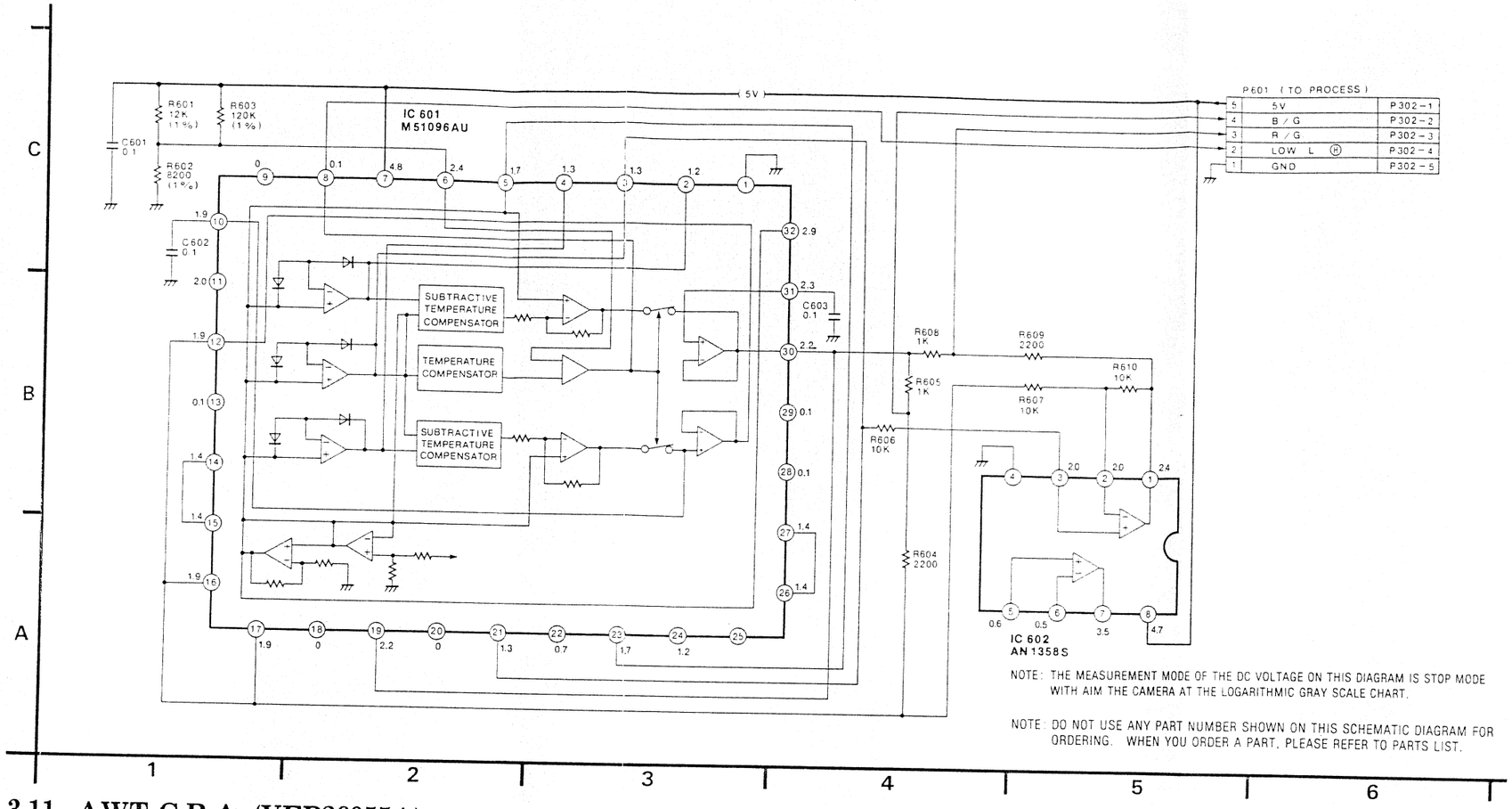

NOTE: THE MEASUREMENT MODE OF THE DC VOLTAGE ON THIS DIAGRAM IS STOP MODE WITH AIM THE CAMERA AT THE LOGARITHMIC GRAY SCALE CHART.

NOTE: DO NOT USE ANY PART NUMBER SHOWN ON THIS SCHEMATIC DIAGRAM FOR ORDERING. WHEN YOU ORDER A PART, PLEASE REFER TO PARTS LIST.

3-11. AWT C.B.A. (VEP26055A)

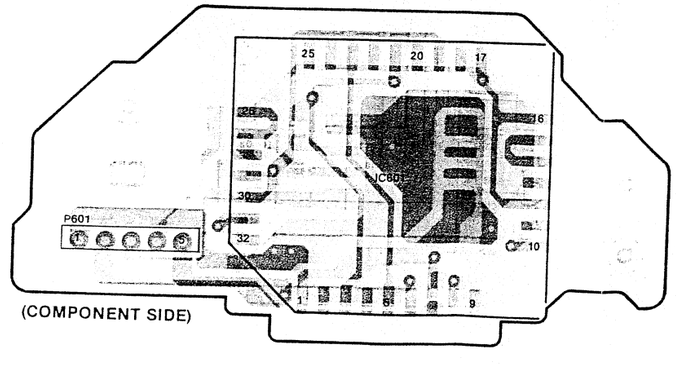

(COMPONENT SIDE)

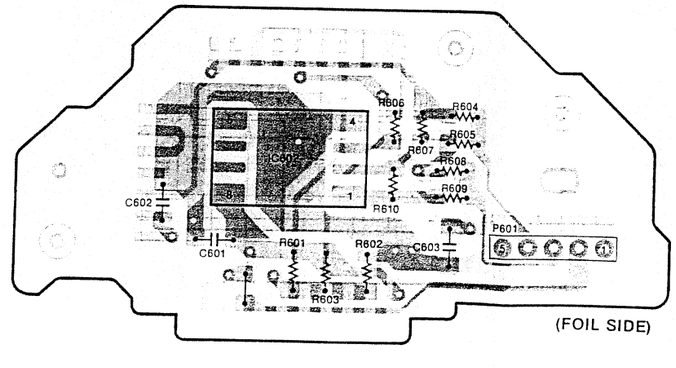

(FOIL SIDE)

AWT C.B.A.	
Integrated Circuit	
IC601	A-2 Ⓒ
IC602	B-4 Ⓕ
Connector	
P601	A-1 Ⓒ
P601	A-5 Ⓕ

ADDRESS INFORMATION
Ⓒ... COMPONENT SIDE
Ⓕ... FOIL SIDE

3-12. PROCESS SCHEMATIC DIAGRAM

LUMINANCE SIGNAL
CHROMINANCE SIGNAL
R-Y SIGNAL
PRE VIDEO SIGNAL
B-Y/R-Y COMPOSITE SIGNAL
B-Y SIGNAL

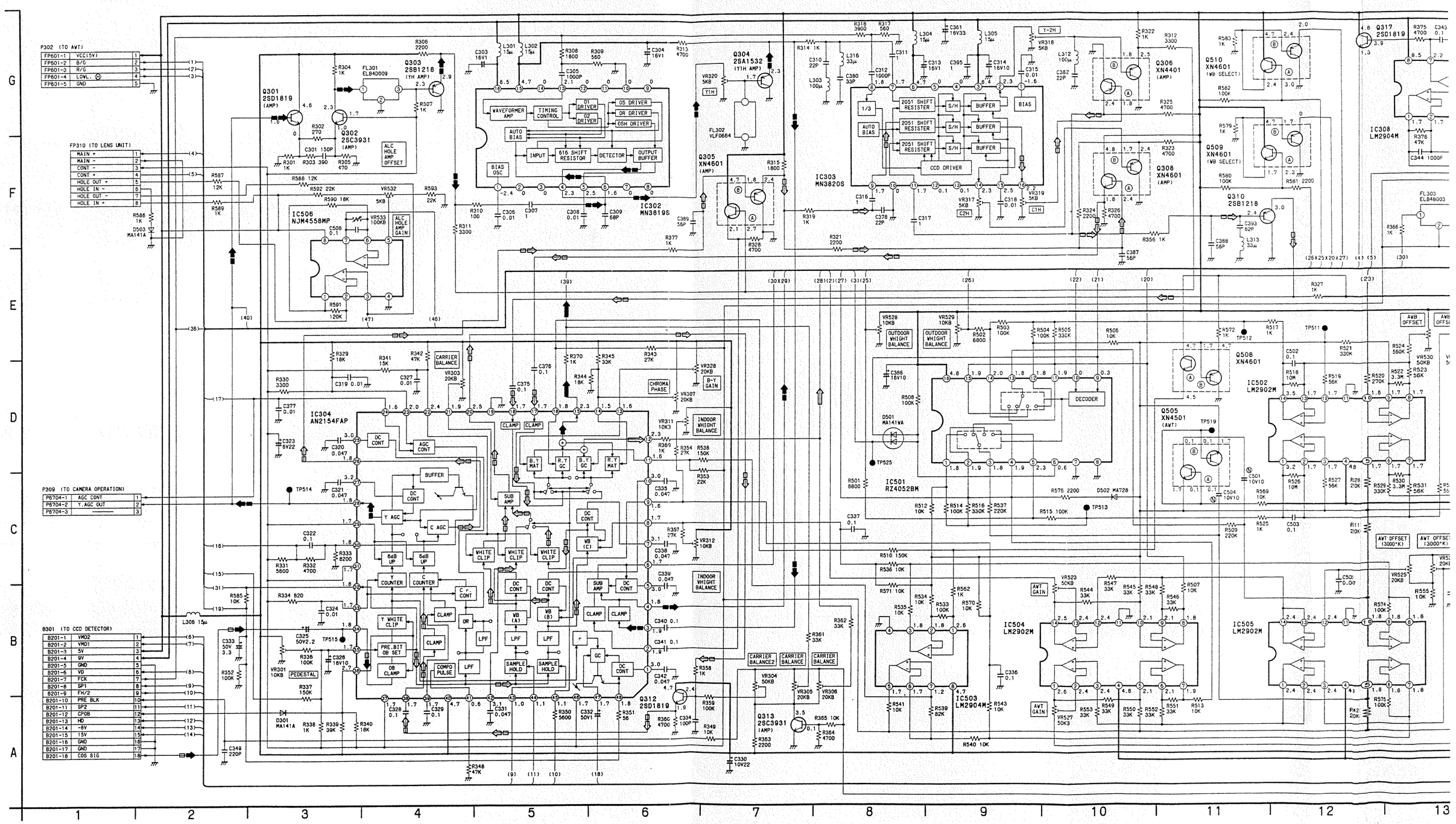

Back Page:
E.V.F. & AWT Section

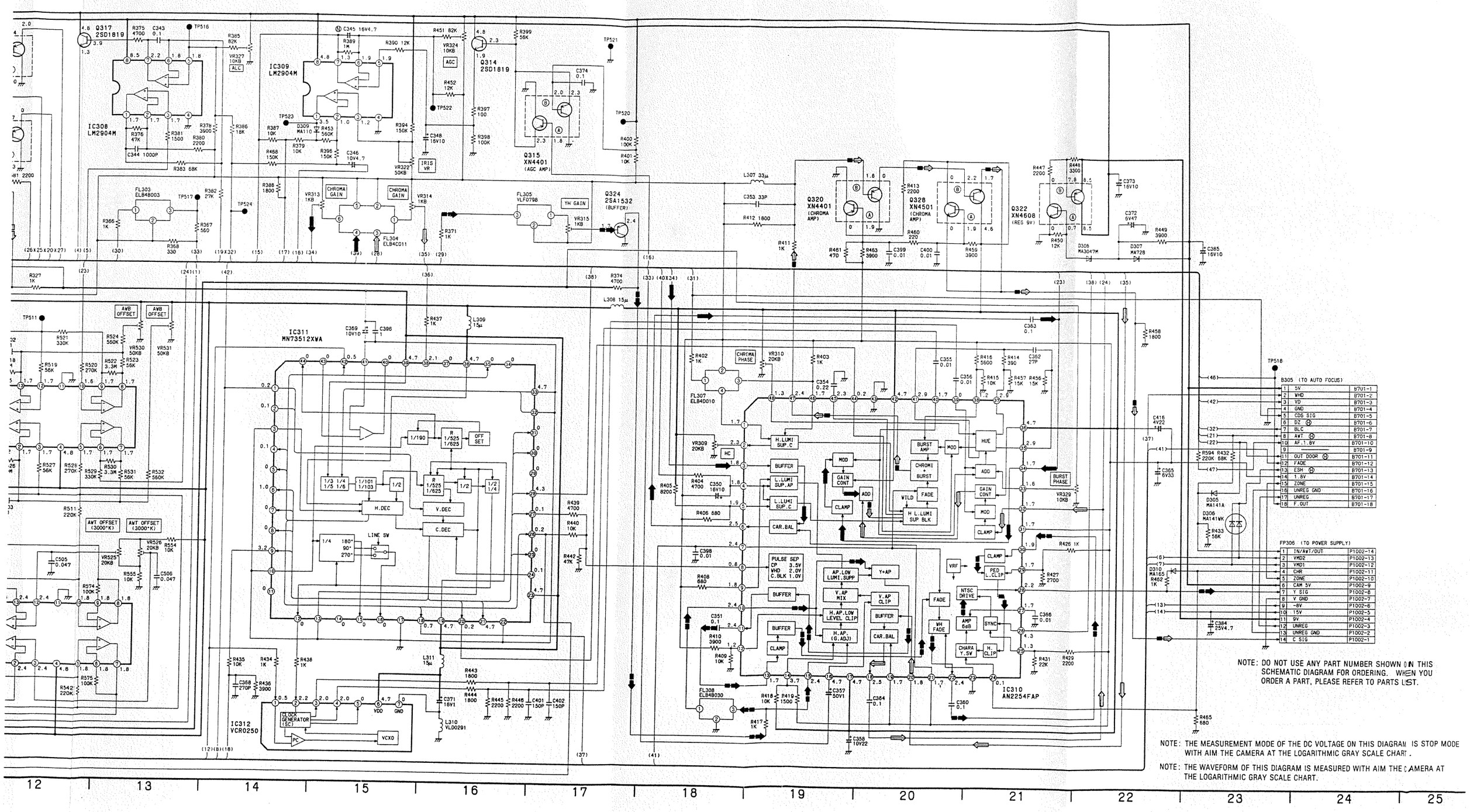
IC309 LM2904M
IC308 LM2904M
IC311 MN73512XWA
IC312 VCR0250
IC310 AN2254FAP
Q317 2SD1819
Q314 2SD1819
Q315 XN4401 (AGC AMP)
Q320 XN4401 (CHROMA AMP)
Q328 XN4501 (CHROMA AMP)
Q322 XN4608 (REG 9V)
Q324 2SA1532 (BUFFER)
FL303 ELB48003
FL304 ELB4C011
FL305 VLF0798
FL307 ELB4D010
FL308 ELB4B030
L310 VLD0291
AGC
ALC
IRIS VR
CHROMA GAIN
YH GAIN
CHROMA PHASE
AVB OFFSET
AWT OFFSET (3000°K)
LINE SW
CLOCK GENERATOR (SC)
VCXO
B305 (TO AUTO FOCUS)
FP306 (TO POWER SUPPLY)
NOTE: DO NOT USE ANY PART NUMBER SHOWN ON THIS SCHEMATIC DIAGRAM FOR ORDERING. WHEN YOU ORDER A PART, PLEASE REFER TO PARTS LIST.
NOTE: THE MEASUREMENT MODE OF THE DC VOLTAGE ON THIS DIAGRAM IS STOP MODE WITH AIM THE CAMERA AT THE LOGARITHMIC GRAY SCALE CHART.
NOTE: THE WAVEFORM OF THIS DIAGRAM IS MEASURED WITH AIM THE CAMERA AT THE LOGARITHMIC GRAY SCALE CHART.

3-13. PROCESS C.B.A. (VEP23095A)

PROCESS CIRCUIT TP (Test Point)
WAVEFORM (REF. NO. 500 Series)

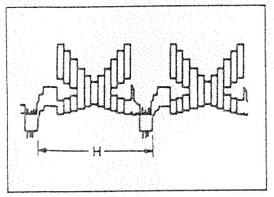

TP514 STOP
0.1V/20μsec. div. 0.32Vp-p

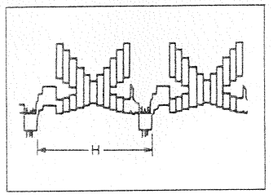

TP515 STOP
0.1V/20μsec. div. 0.45Vp-p

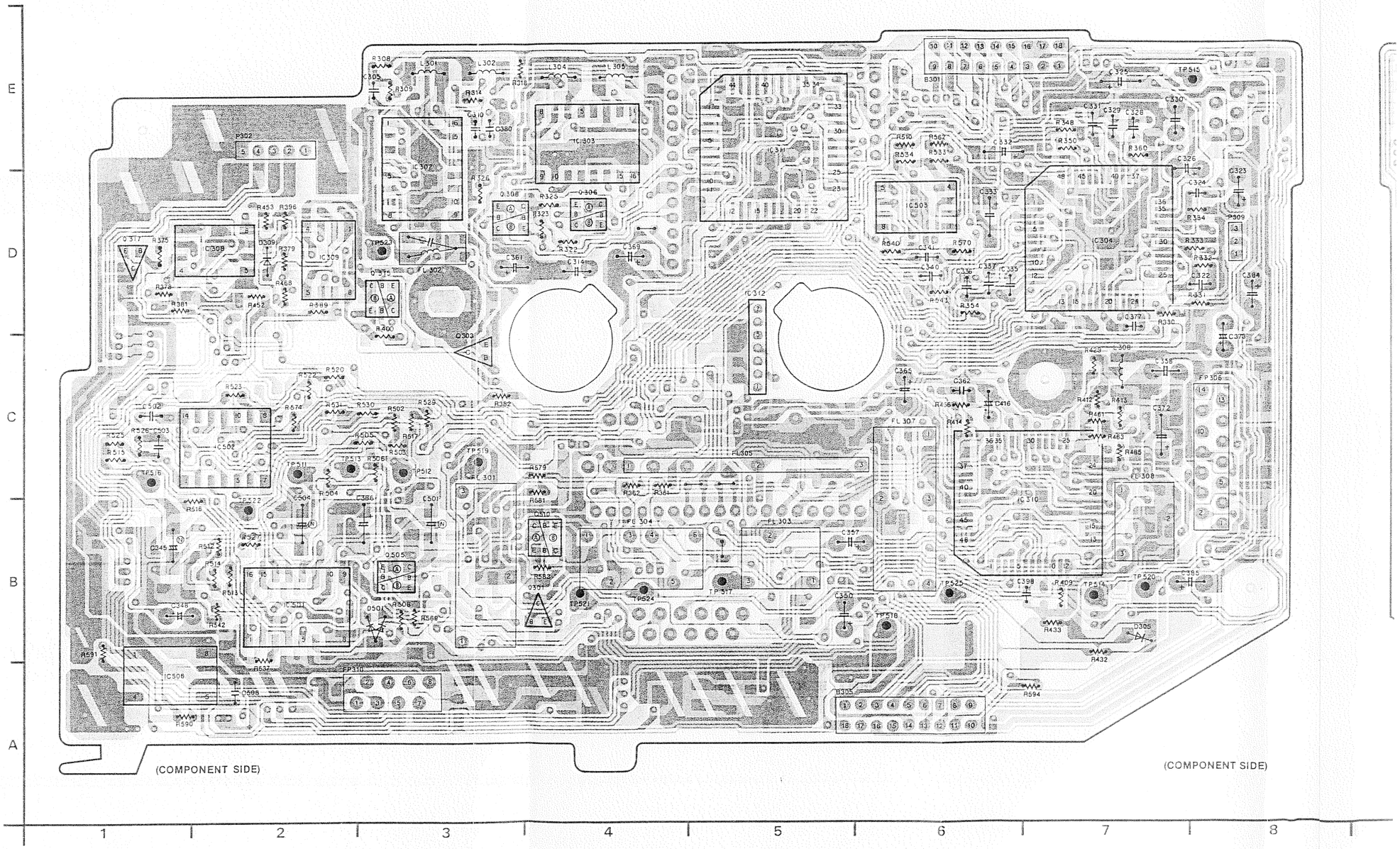

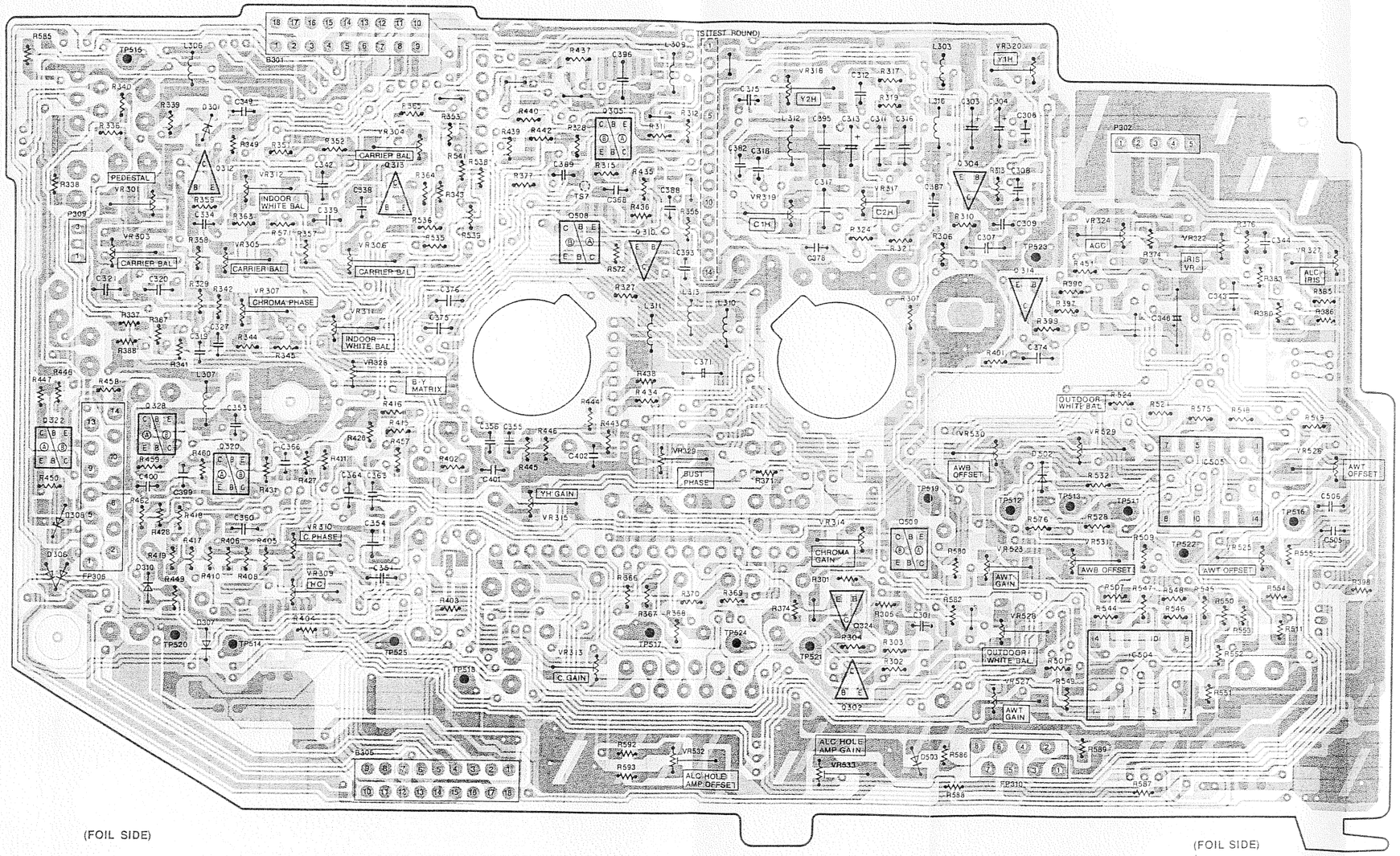

PROCESS C.B.A.					
Transistor			TP520	B-7	Ⓒ
Q301	B-4	Ⓒ	TP521	B-13	Ⓕ
Q302	B-13	Ⓕ	TP521	B-4	Ⓒ
Q303	C-3	Ⓒ	TP522	B-15	Ⓕ
Q304	D-14	Ⓕ	TP522	B-2	Ⓒ
Q305	E-12	Ⓕ	TP523	D-14	Ⓕ
Q306	D-4	Ⓒ	TP523	D-3	Ⓒ
Q308	D-3	Ⓒ	TP524	B-13	Ⓕ
Q310	D-12	Ⓕ	TP524	B-4	Ⓒ
Q312	D-10	Ⓕ	TP525	B-11	Ⓕ
Q313	D-11	Ⓕ	TP525	B-6	Ⓒ
Q314	D-14	Ⓕ	**Adjustment**		
Q315	D-3	Ⓒ	VR301	D-9	Ⓕ
Q317	D-1	Ⓒ	VR303	D-9	Ⓕ
Q320	C-10	Ⓕ	VR304	E-11	Ⓕ
Q322	C-9	Ⓕ	VR305	D-10	Ⓕ
Q324	B-13	Ⓕ	VR306	D-11	Ⓕ
Q328	C-9	Ⓕ	VR307	D-10	Ⓕ
Q505	B-3	Ⓒ	VR309	B-10	Ⓕ
Q508	D-12	Ⓕ	VR310	B-10	Ⓕ
Q509	C-14	Ⓕ	VR311	D-11	Ⓕ
Q510	B-4	Ⓒ	VR312	D-10	Ⓕ
Integrated Circuit			VR313	B-12	Ⓕ
IC302	E-3	Ⓒ	VR314	C-13	Ⓕ
IC303	E-4	Ⓒ	VR315	C-12	Ⓕ
IC304	D-7	Ⓒ	VR317	D-13	Ⓕ
IC308	D-2	Ⓒ	VR318	E-13	Ⓕ
IC309	D-2	Ⓒ	VR319	D-13	Ⓕ
IC310	B-7	Ⓒ	VR320	E-14	Ⓕ
IC311	E-5	Ⓒ	VR322	D-15	Ⓕ
IC312	D-5	Ⓒ	VR324	D-15	Ⓕ
IC501	B-2	Ⓒ	VR327	D-16	Ⓕ
IC502	C-2	Ⓒ	VR328	C-11	Ⓕ
IC503	D-6	Ⓒ	VR329	C-12	Ⓕ
IC504	B-15	Ⓕ	VR523	B-14	Ⓕ
IC505	C-15	Ⓕ	VR525	B-15	Ⓕ
IC506	A-1	Ⓒ	VR526	C-16	Ⓕ
Test Point			VR527	B-14	Ⓕ
TP511	C-15	Ⓕ	VR528	B-14	Ⓕ
TP511	C-2	Ⓒ	VR529	C-15	Ⓕ
TP512	C-14	Ⓕ	VR530	C-14	Ⓕ
TP512	C-3	Ⓒ	VR531	B-15	Ⓕ
TP513	C-14	Ⓕ	VR532	A-12	Ⓕ
TP513	C-2	Ⓒ	VR533	A-13	Ⓕ
TP514	B-10	Ⓕ	**Connector**		
TP514	B-7	Ⓒ	B301	E-10	Ⓕ
TP515	E-8	Ⓒ	B301	E-6	Ⓒ
TP515	E-9	Ⓕ	B305	A-11	Ⓕ
TP516	C-1	Ⓒ	B305	A-6	Ⓒ
TP516	C-16	Ⓕ	FP306	B-9	Ⓕ
TP517	B-12	Ⓕ	FP306	C-8	Ⓒ
TP517	B-5	Ⓒ	FP310	A-14	Ⓕ
TP518	B-11	Ⓕ	FP310	A-3	Ⓒ
TP518	B-6	Ⓒ	P302	E-15	Ⓕ
TP519	C-14	Ⓕ	P302	E-2	Ⓒ
TP519	C-3	Ⓒ	P309	D-8	Ⓒ
TP520	B-10	Ⓕ	P309	D-9	Ⓕ

ADDRESS INFORMATION
Ⓒ... COMPONENT SIDE
Ⓕ... FOIL SIDE

3-14. CCD DRIVE SCHEMATIC DIAGRAM

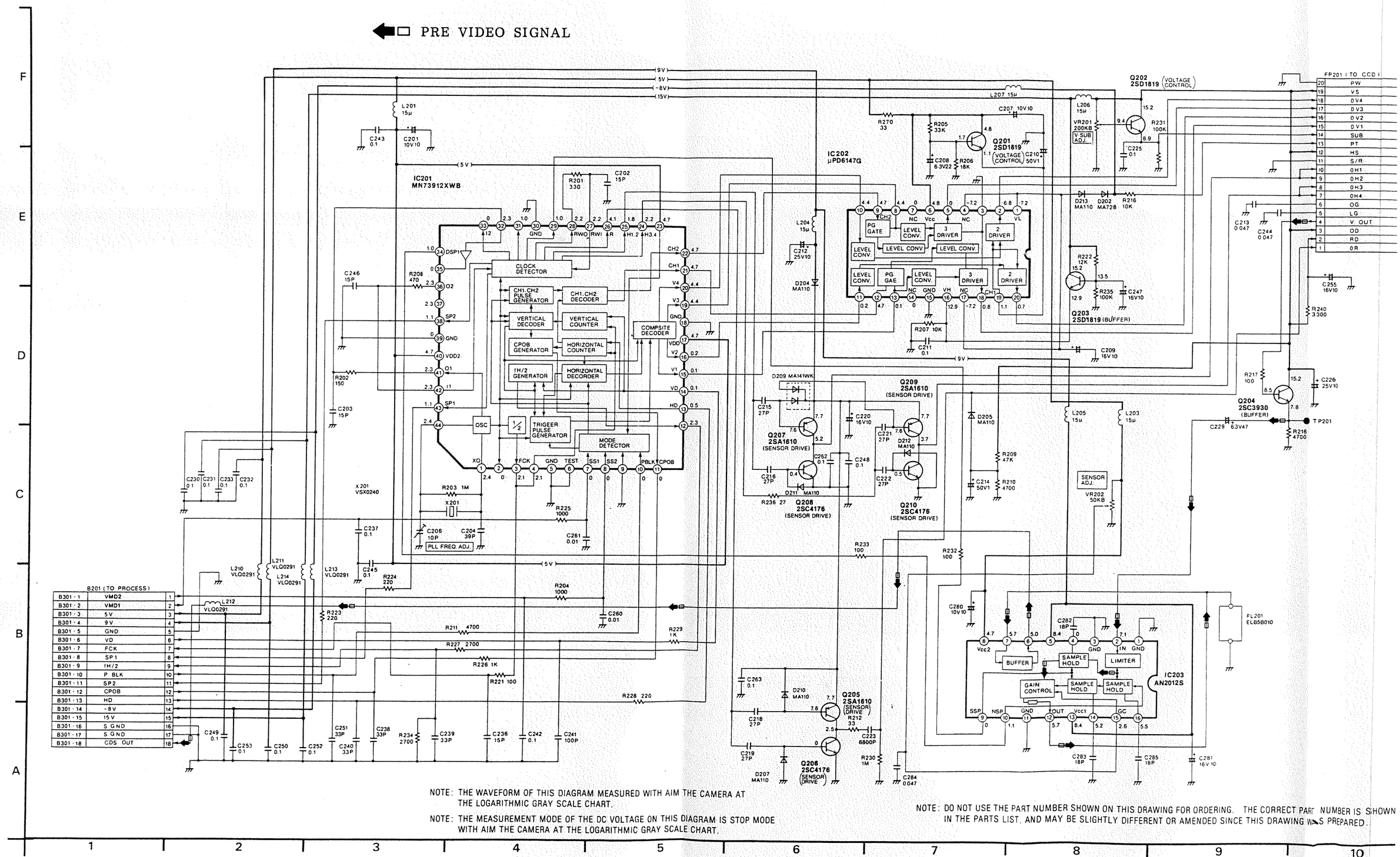

Back Page:
PROCESS Section

3-15. CCD DRIVE C.B.A. (VEP22085A)

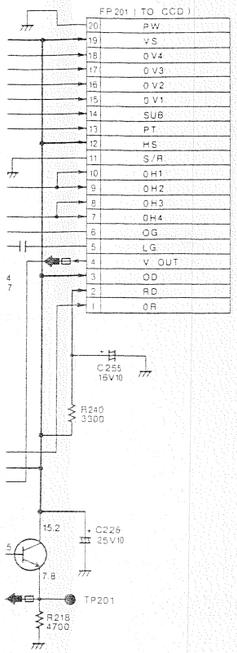

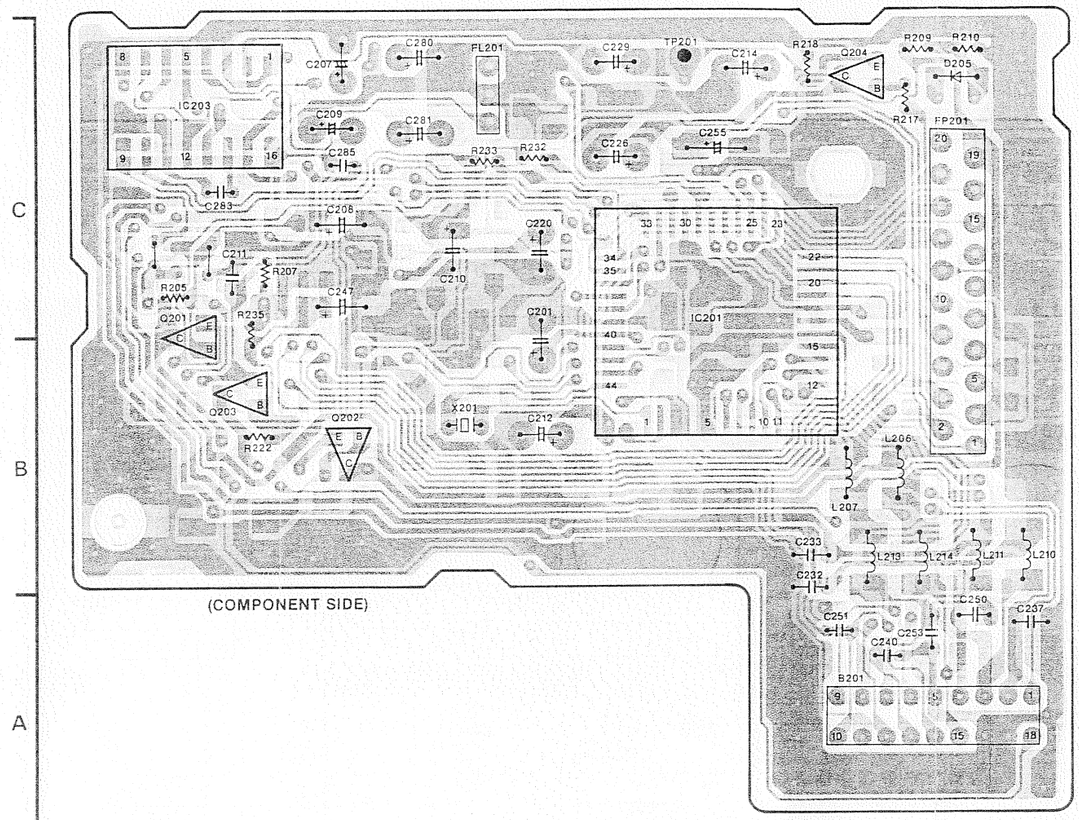

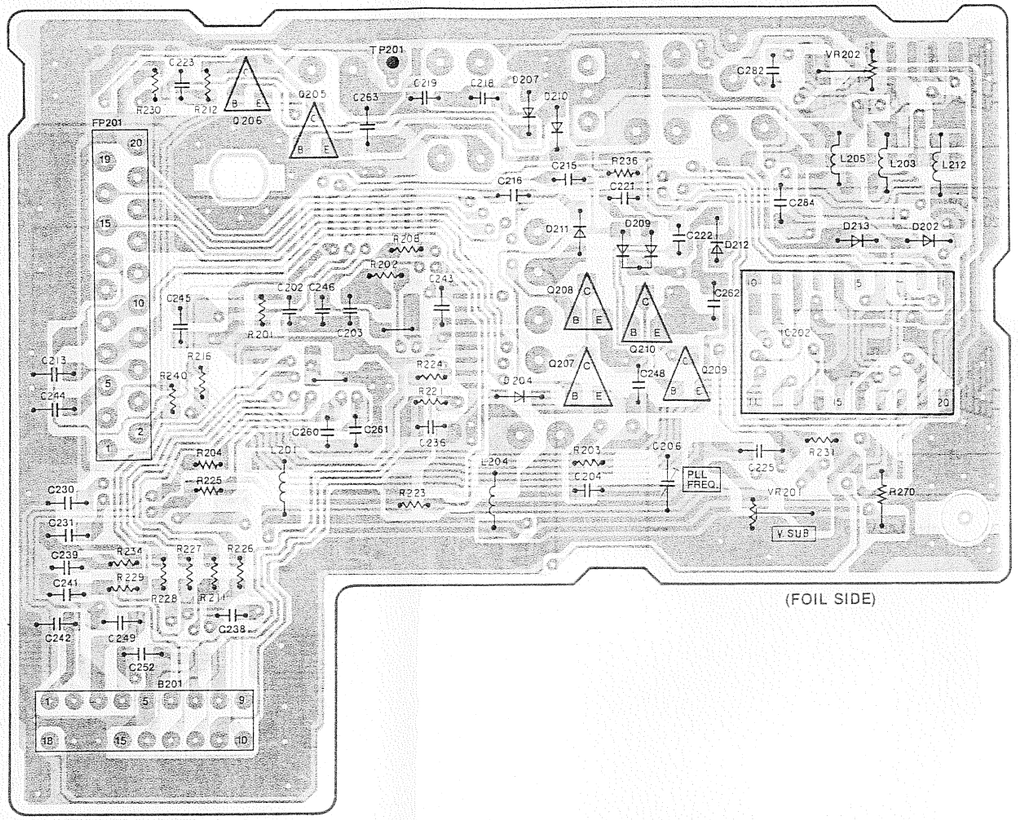

CCD DRIVE CIRCUIT TP (Test Point) WAVEFORM (REF. NO. 200 Series)

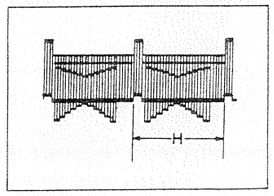

TP201 STOP
0.2V/20μsec. div. 0.8Vp-p

CCD DRIVE C.B.A.			
Transistor		**Test Point**	
Q201	C-1 Ⓒ	TP201	C-3 Ⓒ
Q202	B-2 Ⓒ	TP201	C-6 Ⓕ
Q203	B-1 Ⓒ	**Adjustment**	
Q204	C-4 Ⓒ	C206	B-7 Ⓕ
Q205	C-6 Ⓕ	VR201	B-8 Ⓕ
Q206	C-6 Ⓕ	**Connector**	
Q207	B-7 Ⓕ	B201	A-4 Ⓒ
Q208	C-7 Ⓕ	B201	A-5 Ⓕ
Q209	B-7 Ⓕ	FP201	C-4 Ⓒ
Q210	B-7 Ⓕ	FP201	C-5 Ⓕ
Integrated Circuit			
IC201	C-3 Ⓒ		
IC202	B-8 Ⓕ		
IC203	C-1 Ⓒ		

ADDRESS INFORMATION
Ⓒ... COMPONENT SIDE
Ⓕ... FOIL SIDE

CORRECT PART NUMBER IS SHOWN
DRAWING WAS PREPARED.

3-16. AUTO FOCUS SCHEMATIC DIAGRAM

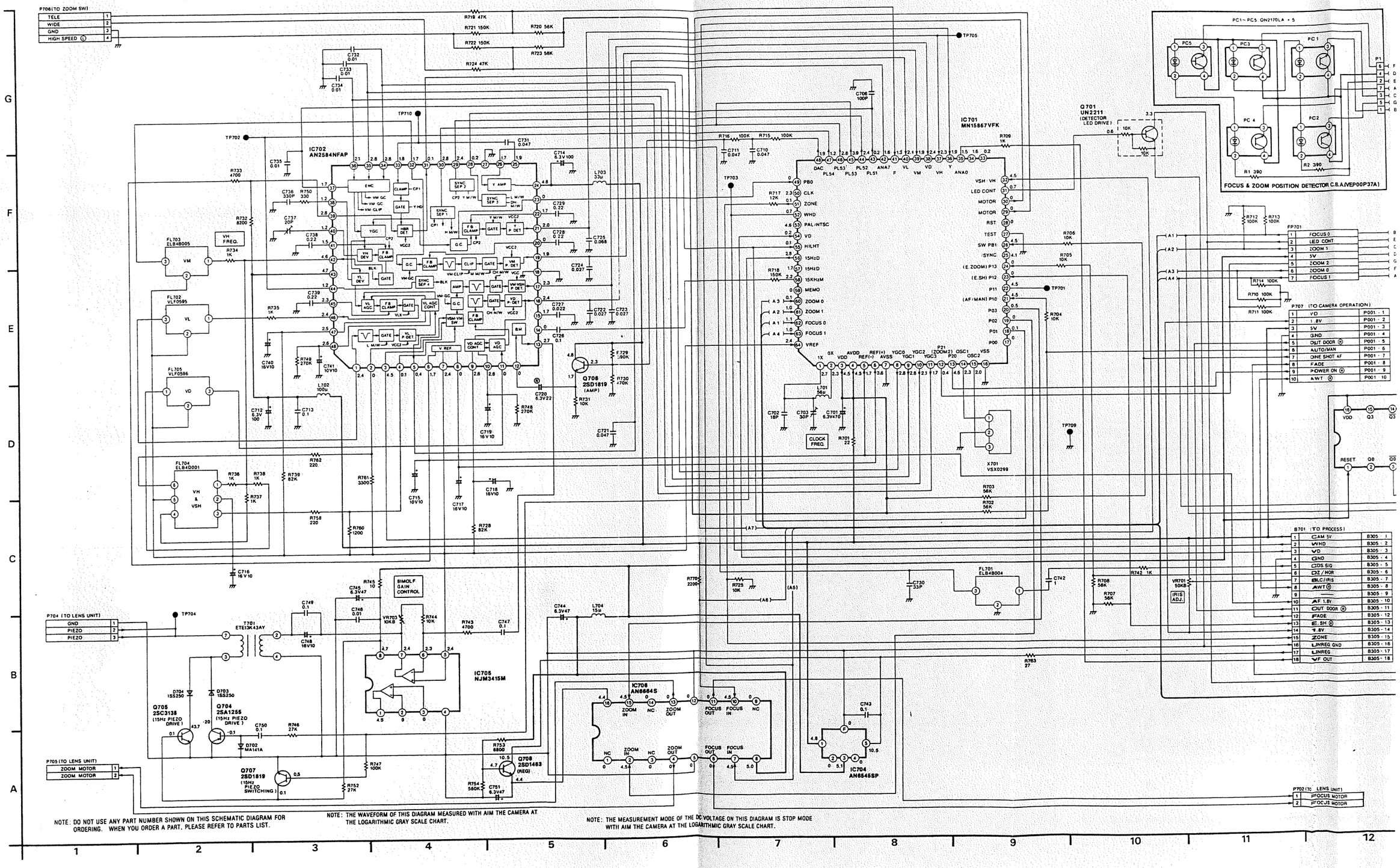

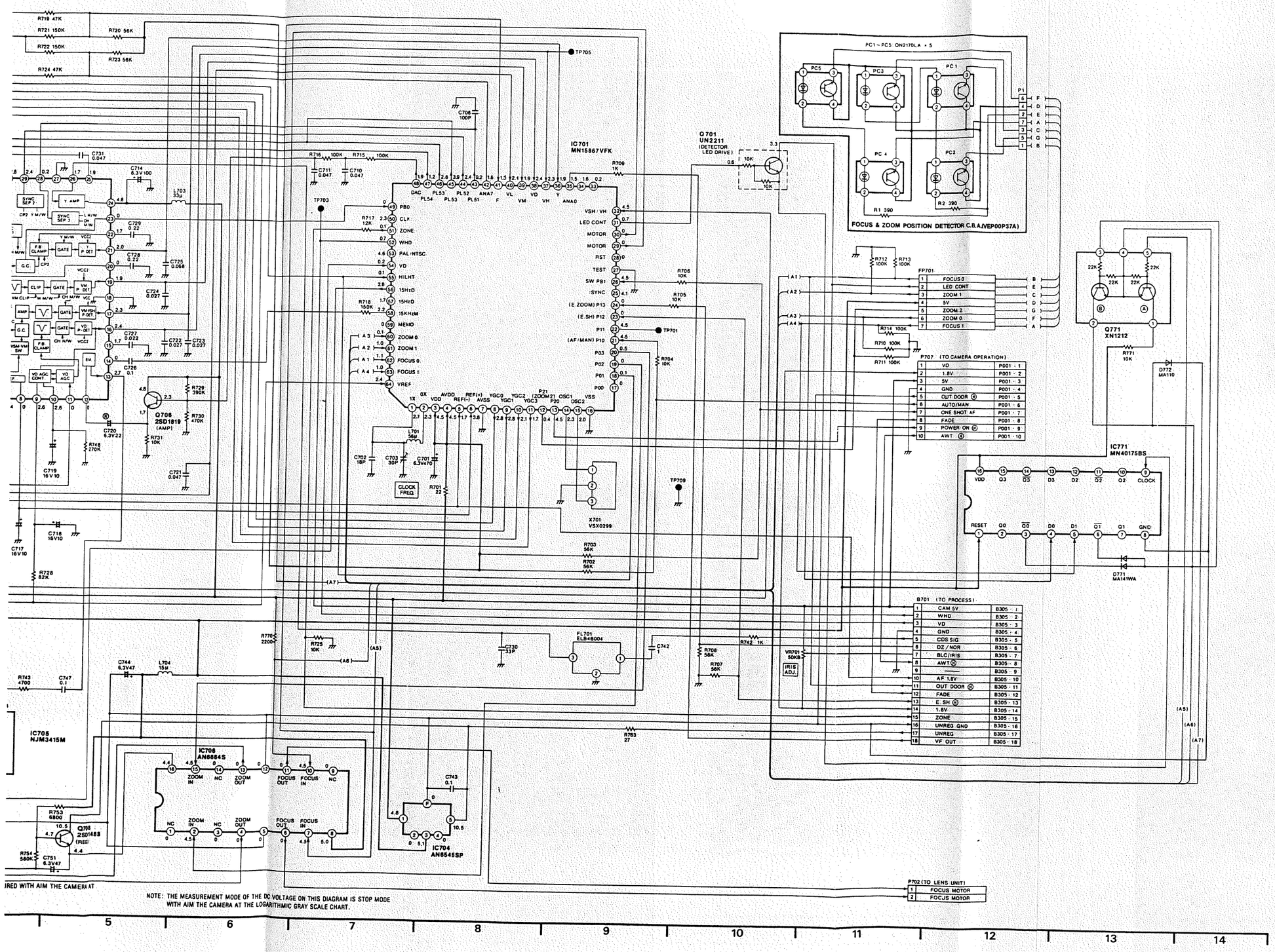

AUTO FOCUS CIRCUIT TP (Test Point) WAVEFORM (REF. NO. 700 Series)

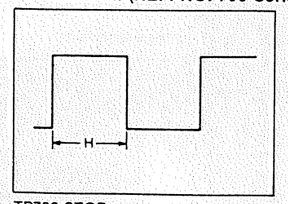

TP702 STOP
2.0V/20μsec. div. 4.5Vp-p

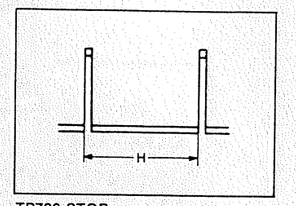

TP703 STOP
2.0V/20μsec. div. 5.0Vp-p

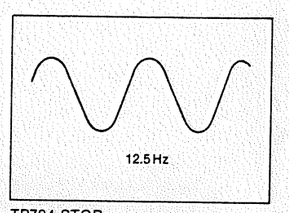

TP704 STOP
10.0V/20msec. div. 30Vp-p

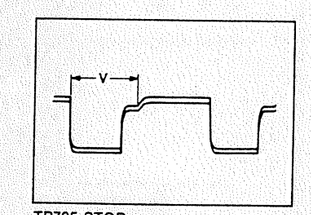

TP705 STOP
0.5V/5msec. div. 1.3Vp-p

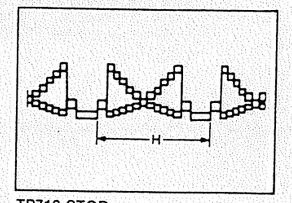

TP710 STOP
0.1V/20μsec. div. 0.3Vp-p

3-17. AUTO FOCUS C.B.A. (VEP27044B)

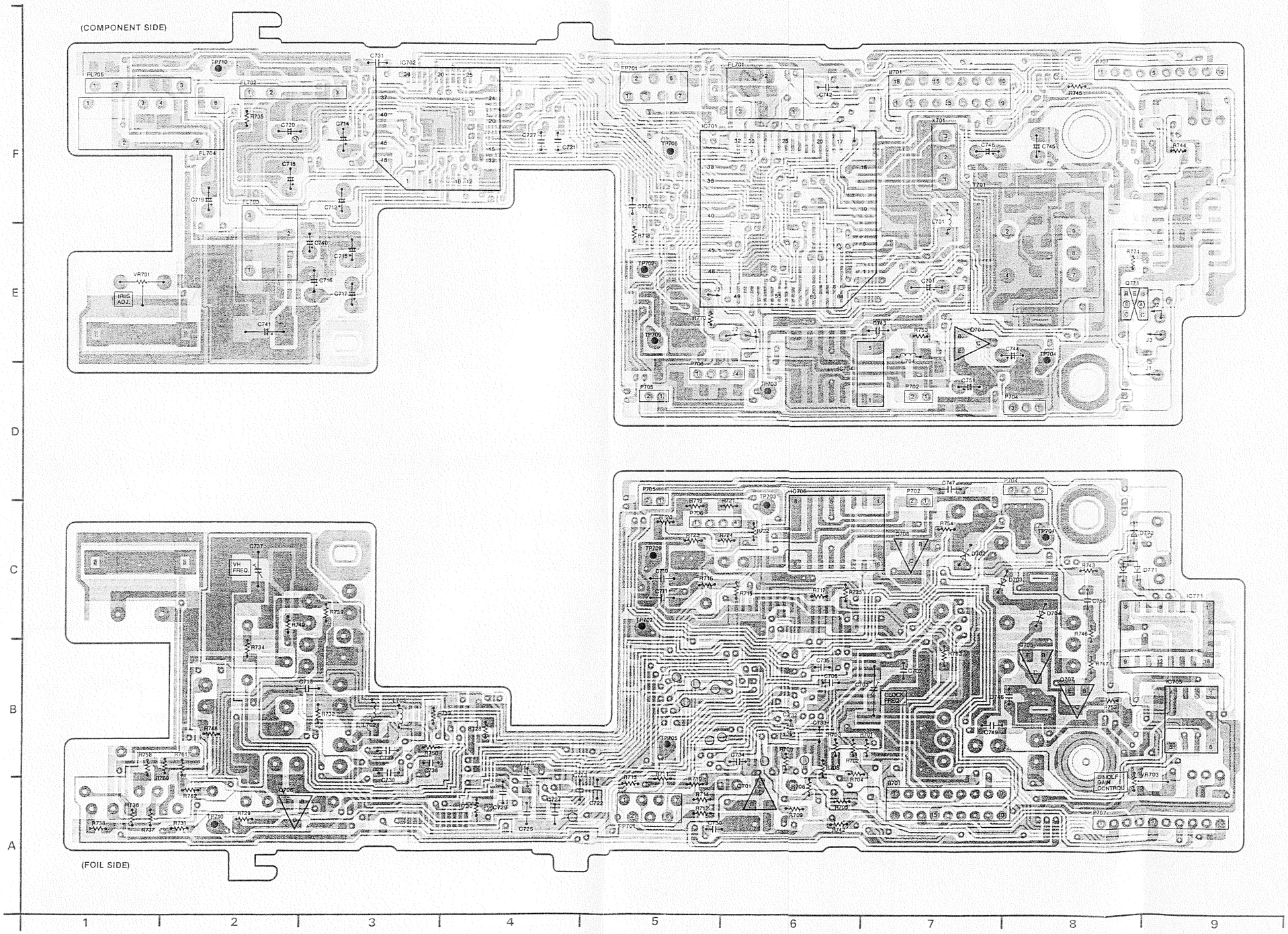

AUTO FOCUS C.B.A.		
Transistor		
Q701	A-6	Ⓕ
Q704	E-7	Ⓒ
Q705	B-8	Ⓕ
Q706	A-2	Ⓕ
Q707	B-8	Ⓕ
Q708	C-7	Ⓕ
Q771	E-8	Ⓒ
Integrated Circuit		
IC701	F-6	Ⓒ
IC702	F-3	Ⓒ
IC704	D-6	Ⓒ
IC705	B-9	Ⓕ
IC706	C-6	Ⓕ
IC771	C-9	Ⓕ
Test Point		
TP702	C-5	Ⓕ
TP702	E-5	Ⓒ
TP703	A-6	Ⓕ
TP703	D-6	Ⓒ
TP704	C-8	Ⓕ
TP704	E-8	Ⓒ
TP705	B-5	Ⓕ
TP705	F-5	Ⓒ
TP709	C-5	Ⓕ
TP709	E-5	Ⓒ
TP710	A-2	Ⓒ
TP710	F-2	Ⓒ
Adjustment		
C703	B-7	Ⓕ
C737	C-2	Ⓕ
VR701	E-1	Ⓕ
VR703	B-9	Ⓕ
Connector		
B701	A-7	Ⓕ
B701	F-7	Ⓕ
FP701	A-5	Ⓕ
FP701	F-5	Ⓕ
P702	C-7	Ⓕ
P702	D-7	Ⓕ
P704	D-8	Ⓕ
P704	D-8	Ⓕ
P705	D-5	Ⓕ
P705	D-5	Ⓕ
P706	C-5	Ⓕ
P706	E-5	Ⓕ
P707	A-8	Ⓕ
P707	F-8	Ⓕ

ADDRESS INFORMATION
Ⓒ... COMPONENT SIDE
Ⓕ... FOIL SIDE

Next Page:
MAIN C.B.A. Section

3-18. MAIN C.B.A. (VEP06612C) & VTR OPERATION C.B.A. (VEP06613A)

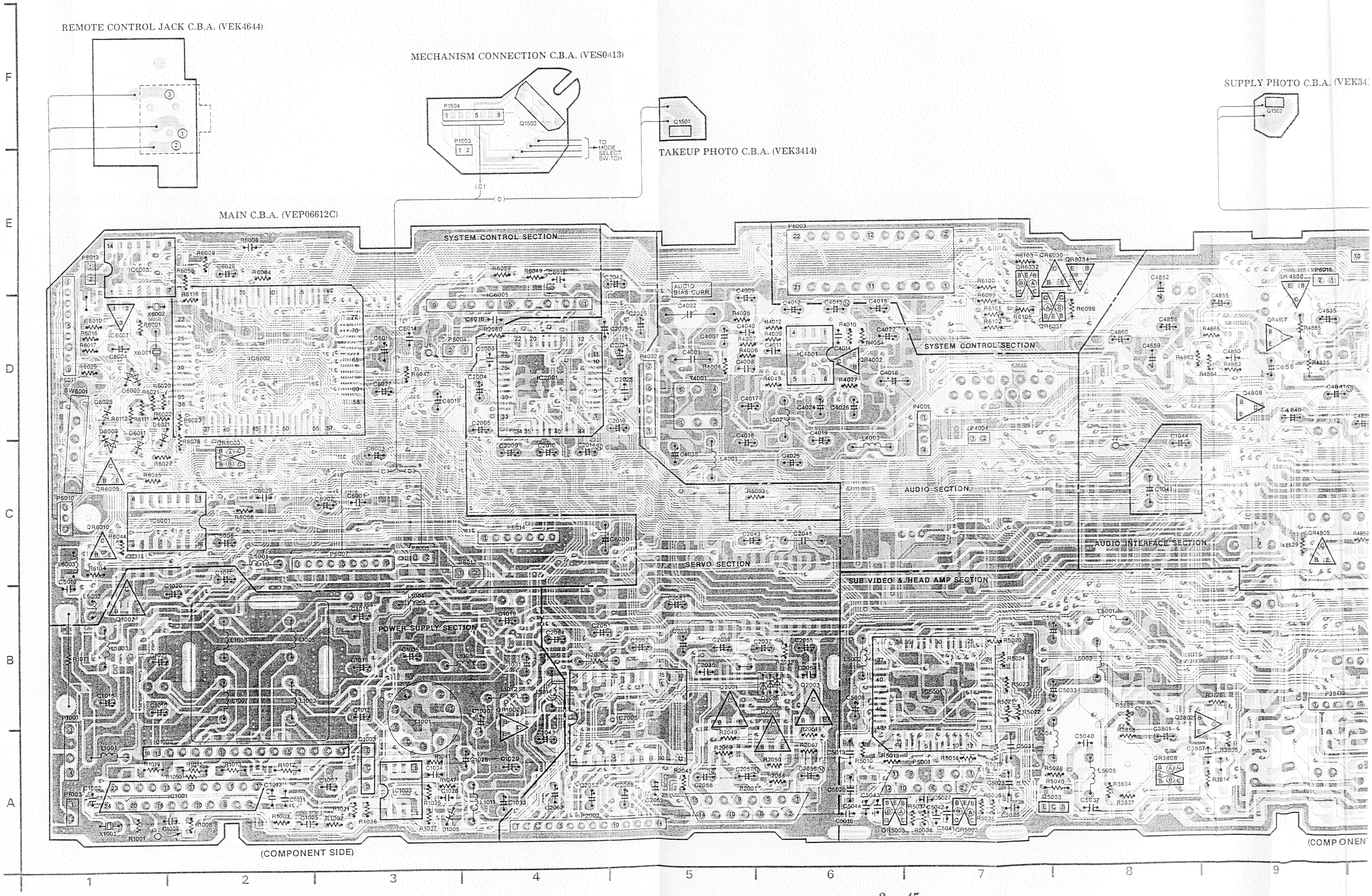

)TO C.B.A. (VEK3414)

SUPPLY PHOTO C.B.A. (VEK3415)

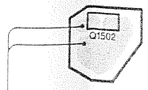

FE HEAD C.B.A. (VEP00H73B)

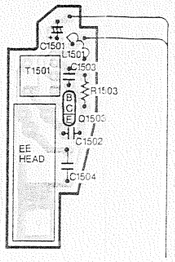

VTR OPERATION C.B.A. (VEP06613A)

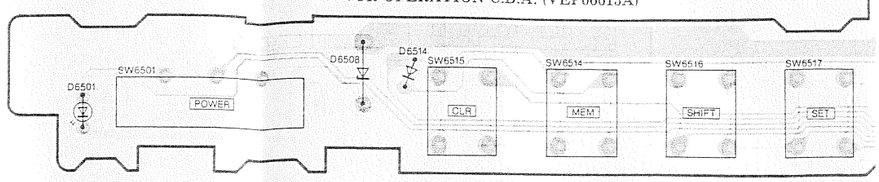

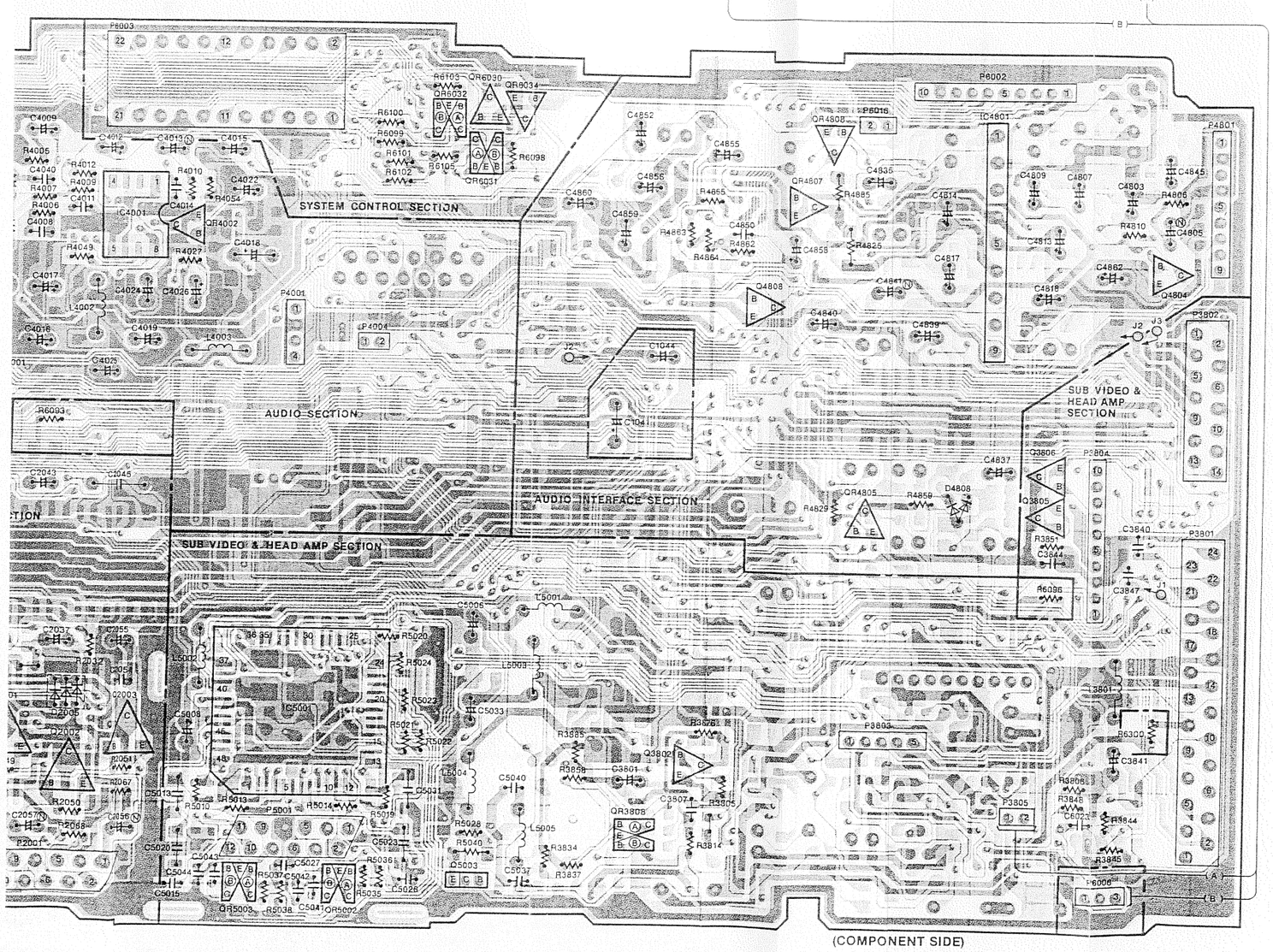

(COMPONENT SIDE)

MAIN C.B.A. (VEP06612C)

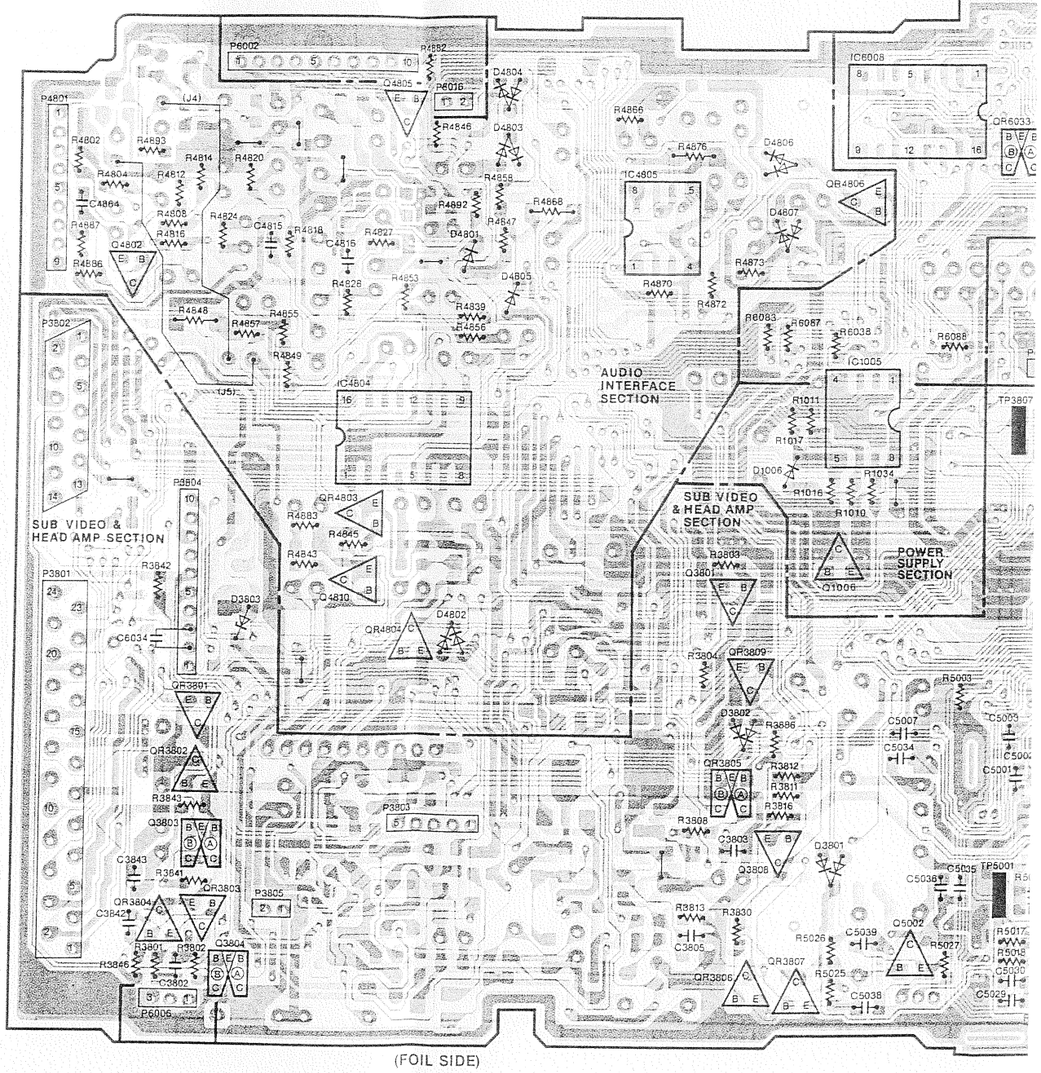

(FOIL SIDE)

VTR OPERATION C.B.A. (VEP06613A)

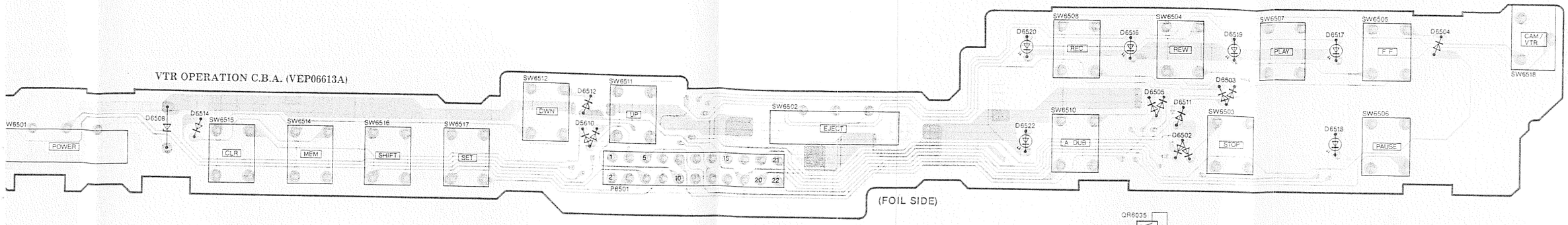

MAIN C.B.A. (VEP06612C)

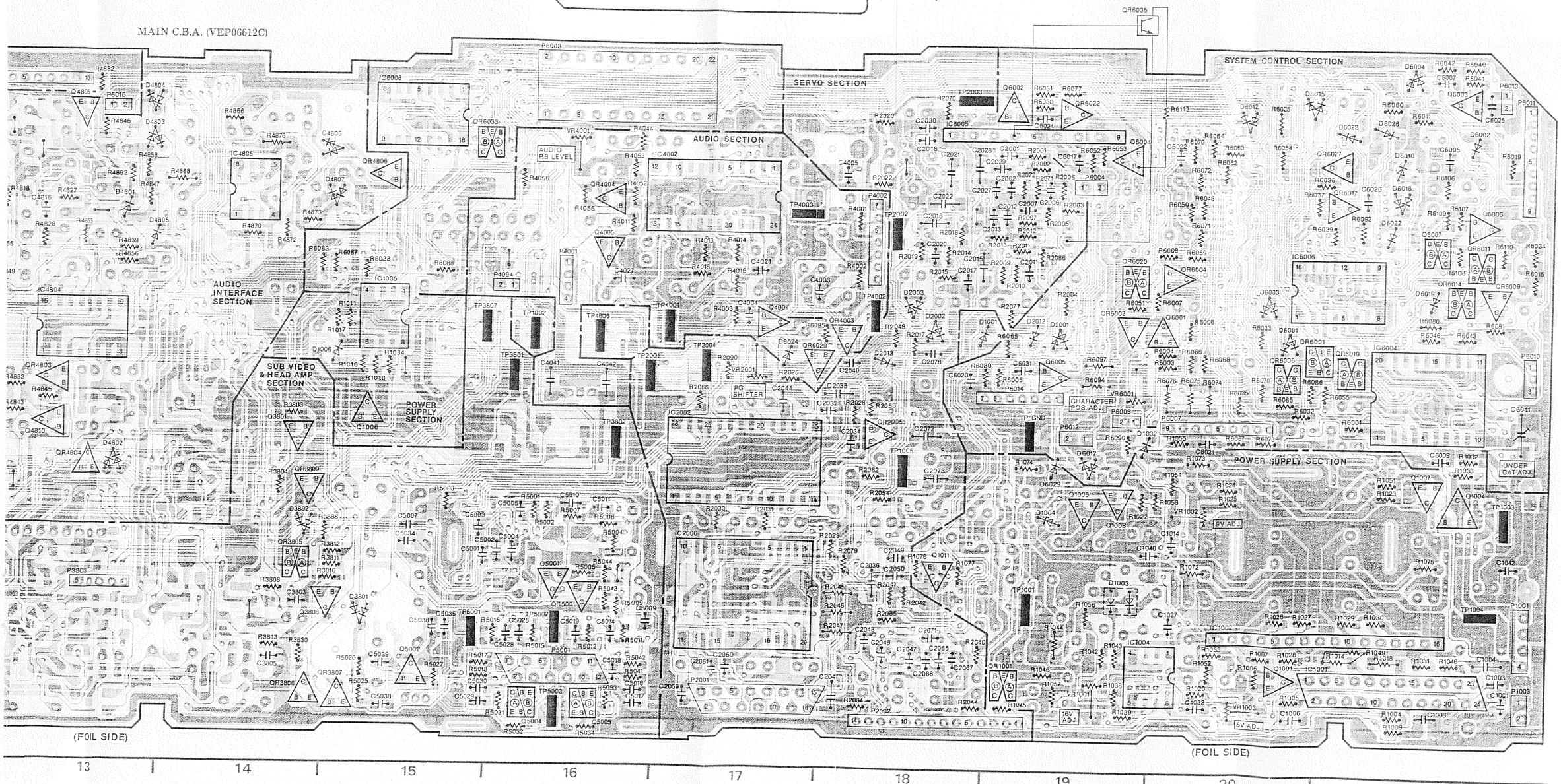

POWER SUPPLY Section on MAIN C.B.A.	
Transistor	
Q1001	A-20 Ⓕ
Q1002	B-1 Ⓒ
Q1003	A-3 Ⓒ
Q1004	B-21 Ⓕ
Q1005	B-19 Ⓕ
Q1006	C-15 Ⓕ
Q1007	B-21 Ⓕ
Q1008	B-19 Ⓕ
Q1011	B-18 Ⓕ
Transistor & Resistor	
QR1001	A-19 Ⓕ
QR1002	B-4 Ⓒ
Integrated Circuit	
IC1001	A-2 Ⓒ
IC1001	A-21 Ⓕ
IC1002	A-2 Ⓒ
IC1002	A-20 Ⓕ
IC1003	A-3 Ⓒ
IC1004	A-19 Ⓕ
IC1005	C-15 Ⓕ
Test Point	
TP1001	B-19 Ⓕ
TP1002	C-16 Ⓕ
TP1003	B-21 Ⓕ
TP1004	B-21 Ⓕ
TP1005	B-18 Ⓕ
Adjustment	
VR1001	A-19 Ⓕ
VR1002	B-20 Ⓕ
VR1003	A-20 Ⓕ
Connector	
P1001	B-1 Ⓒ
P1001	B-21 Ⓕ
P1003	A-1 Ⓒ
P1003	A-21 Ⓕ

ADDRESS INFORMATION
Ⓒ... COMPONENT SIDE
Ⓕ... FOIL SIDE

SERVO Section on MAIN C.B.A.	
Transistor	
Q2001	B-5 Ⓒ
Q2002	B-6 Ⓒ
Q2003	B-6 Ⓒ
Transistor & Resistor	
QR2005	C-18 Ⓕ
Integrated Circuit	
IC2001	D-4 Ⓒ
IC2002	C-17 Ⓕ
IC2005	B-5 Ⓒ
IC2006	B-17 Ⓕ
Test Point	
TP2001	C-16 Ⓕ
TP2002	D-18 Ⓕ
TP2003	E-18 Ⓕ
TP2004	C-17 Ⓕ
TP GND	C-19 Ⓕ
Adjustment	
VR2001	C-17 Ⓕ
Connector	
P2001	A-17 Ⓕ
P2001	A-5 Ⓒ
P2002	A-18 Ⓕ
P2002	A-4 Ⓒ

ADDRESS INFORMATION
Ⓒ... COMPONENT SIDE
Ⓕ... FOIL SIDE

SYSTEM CONTROL Section on MAIN C.B.A.	
Transistor	
Q1501	F-5
Q1502	F-9
Q1503	F-4
Q6001	C-20 Ⓕ
Q6002	E-19 Ⓕ
Q6003	E-21 Ⓕ
Q6004	D-19 Ⓕ
Q6005	C-19 Ⓕ
Q6006	D-21 Ⓕ
Q6007	D-21 Ⓕ
Transistor & Resistor	
QR6001	C-20 Ⓕ
QR6002	C-19 Ⓕ
QR6003	C-2 Ⓒ
QR6004	D-20 Ⓕ
QR6005	C-1 Ⓒ
QR6006	C-20 Ⓕ
QR6009	D-21 Ⓕ
QR6010	C-1 Ⓒ
QR6011	D-21 Ⓕ
QR6014	D-21 Ⓕ
QR6017	D-21 Ⓕ
QR6019	C-21 Ⓕ
QR6020	D-19 Ⓕ
QR6022	E-19 Ⓕ
QR6027	D-21 Ⓕ
QR6029	C-17 Ⓕ
QR6030	E-8 Ⓒ
QR6031	D-8 Ⓒ
QR6032	E-7 Ⓒ
QR6033	D-15 Ⓕ
QR6034	E-8 Ⓒ
QR6035	E-19 Ⓕ
Integrated Circuit	
IC6001	C-2 Ⓒ
IC6002	D-2 Ⓒ
IC6003	E-1 Ⓒ
IC6004	C-21 Ⓕ
IC6005	D-18 Ⓕ
IC6005	D-4 Ⓒ
IC6006	C-20 Ⓕ
IC6006	D-20 Ⓕ
IC6007	D-1 Ⓒ
IC6008	E-15 Ⓕ
Adjustment	
C6011	C-21 Ⓕ
VR6001	C-19 Ⓕ
Connector	
P1503	E-4
P1504	F-4
P6002	E-10 Ⓒ
P6002	E-12 Ⓕ
P6003	E-6 Ⓒ
P6003	F-16 Ⓕ
P6004	D-19 Ⓕ
P6004	D-4 Ⓒ
P6005	C-19 Ⓕ
P6005	C-3 Ⓒ
P6006	A-10 Ⓒ
P6006	A-12 Ⓕ
P6007	C-20 Ⓕ
P6007	C-3 Ⓒ
P6010	C-1 Ⓒ
P6010	C-21 Ⓕ
P6011	D-1 Ⓒ
P6011	E-21 Ⓕ
P6012	C-19 Ⓕ
P6012	C-4 Ⓒ
P6013	E-1 Ⓒ
P6013	E-21 Ⓕ
P6014	C-19 Ⓕ
P6014	C-4 Ⓒ
P6016	E-13 Ⓕ
P6016	E-9 Ⓒ
P6501	E-16

ADDRESS INFORMATION
Ⓒ... COMPONENT SIDE
Ⓕ... FOIL SIDE

SUB VIDEO & HEAD AMP Section on MAIN C.B.A.	
Transistor	
Q3801	C-14 Ⓕ
Q3802	B-8 Ⓒ
Q3803	B-12 Ⓕ
Q3804	A-12 Ⓕ
Q3805	C-10 Ⓒ
Q3806	C-10 Ⓒ
Q3808	A-15 Ⓕ
Q5001	B-16 Ⓕ
Q5002	A-15 Ⓕ
Q5003	A-8 Ⓒ
Q5004	A-16 Ⓕ
Q5005	A-16 Ⓕ
Transistor & Resistor	
QR3801	B-12 Ⓕ
QR3802	B-12 Ⓕ
QR3803	A-12 Ⓕ
QR3804	A-12 Ⓕ
QR3805	B-14 Ⓕ
QR3806	A-14 Ⓕ
QR3807	A-15 Ⓕ
QR3808	A-8 Ⓒ
QR3809	B-14 Ⓕ
QR5001	B-16 Ⓕ
QR5002	A-7 Ⓒ
QR5003	A-6 Ⓒ
Integrated Circuit	
IC5001	B-7 Ⓒ
Test Point	
TP3801	C-16 Ⓕ
TP3802	C-16 Ⓕ
TP3807	C-16 Ⓕ
TP5001	A-15 Ⓕ
TP5002	A-16 Ⓕ
TP5003	A-16 Ⓕ
Connector	
P3801	C-12 Ⓕ
P3801	C-11 Ⓒ
P3802	D-11 Ⓒ
P3802	D-12 Ⓕ
P3803	B-13 Ⓕ
P3803	B-9 Ⓒ
P3804	C-10 Ⓒ
P3804	C-12 Ⓕ
P3805	A-10 Ⓒ
P3805	A-12 Ⓕ
P5001	A-16 Ⓕ
P5001	A-7 Ⓒ

ADDRESS INFORMATION
Ⓒ... COMPONENT SIDE
Ⓕ... FOIL SIDE

AUDIO INTERFACE Section on MAIN C.B.A.	
Transistor	
Q4802	D-12 Ⓕ
Q4804	D-11 Ⓒ
Q4805	E-13 Ⓕ
Q4807	D-8 Ⓒ
Q4808	D-9 Ⓒ
Q4810	C-13 Ⓕ
Transistor & Resistor	
QR4803	C-13 Ⓕ
QR4804	B-13 Ⓕ
QR4805	C-9 Ⓒ
QR4806	D-15 Ⓕ
QR4807	D-9 Ⓒ
QR4808	E-9 Ⓒ
Integrated Circuit	
IC4801	D-10 Ⓒ
IC4804	C-13 Ⓕ
IC4805	D-14 Ⓕ
Test Point	
TP4806	C-16 Ⓕ
Connector	
P4801	D-11 Ⓒ
P4801	D-12 Ⓕ

ADDRESS INFORMATION
Ⓒ... COMPONENT SIDE
Ⓕ... FOIL SIDE

AUDIO Section on MAIN C.B.A.	
Transistor	
Q1504	F-10
Q4001	C-17 Ⓕ
Q4005	D-16 Ⓕ
Transistor & Resistor	
QR4002	D-6 Ⓒ
QR4003	C-18 Ⓕ
QR4004	D-16 Ⓕ
Integrated Circuit	
IC4001	D-6 Ⓒ
IC4002	D-17 Ⓕ
Test Point	
TP4001	C-17 Ⓕ
TP4002	C-18 Ⓕ
TP4003	D-17 Ⓕ
Adjustment	
C4002	D-5 Ⓒ
VR4001	D-16 Ⓕ
Connector	
P4001	D-16 Ⓕ
P4001	D-7 Ⓒ
P4002	D-18 Ⓕ
P4002	D-5 Ⓒ
P4004	C-16 Ⓕ
P4004	C-7 Ⓒ

ADDRESS INFORMATION
Ⓒ... COMPONENT SIDE
Ⓕ... FOIL SIDE
Ⓒ... COMPONENT SIDE
Ⓕ... FOIL SIDE

3-19. POWER SUPPLY SCHEMATIC DIAGRAM

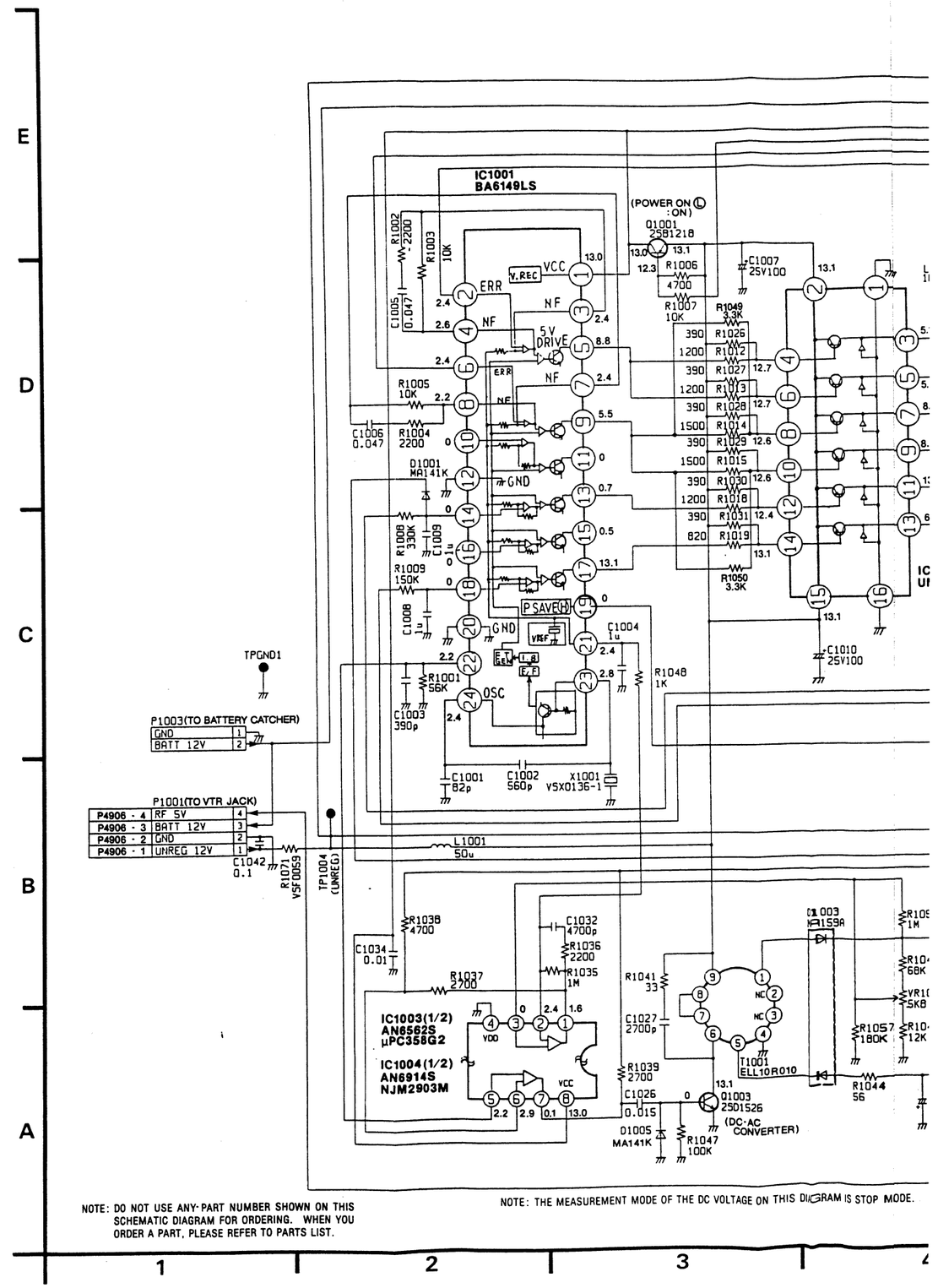

3-19. POWER SUPPLY SCHEMATIC DIAGRAM

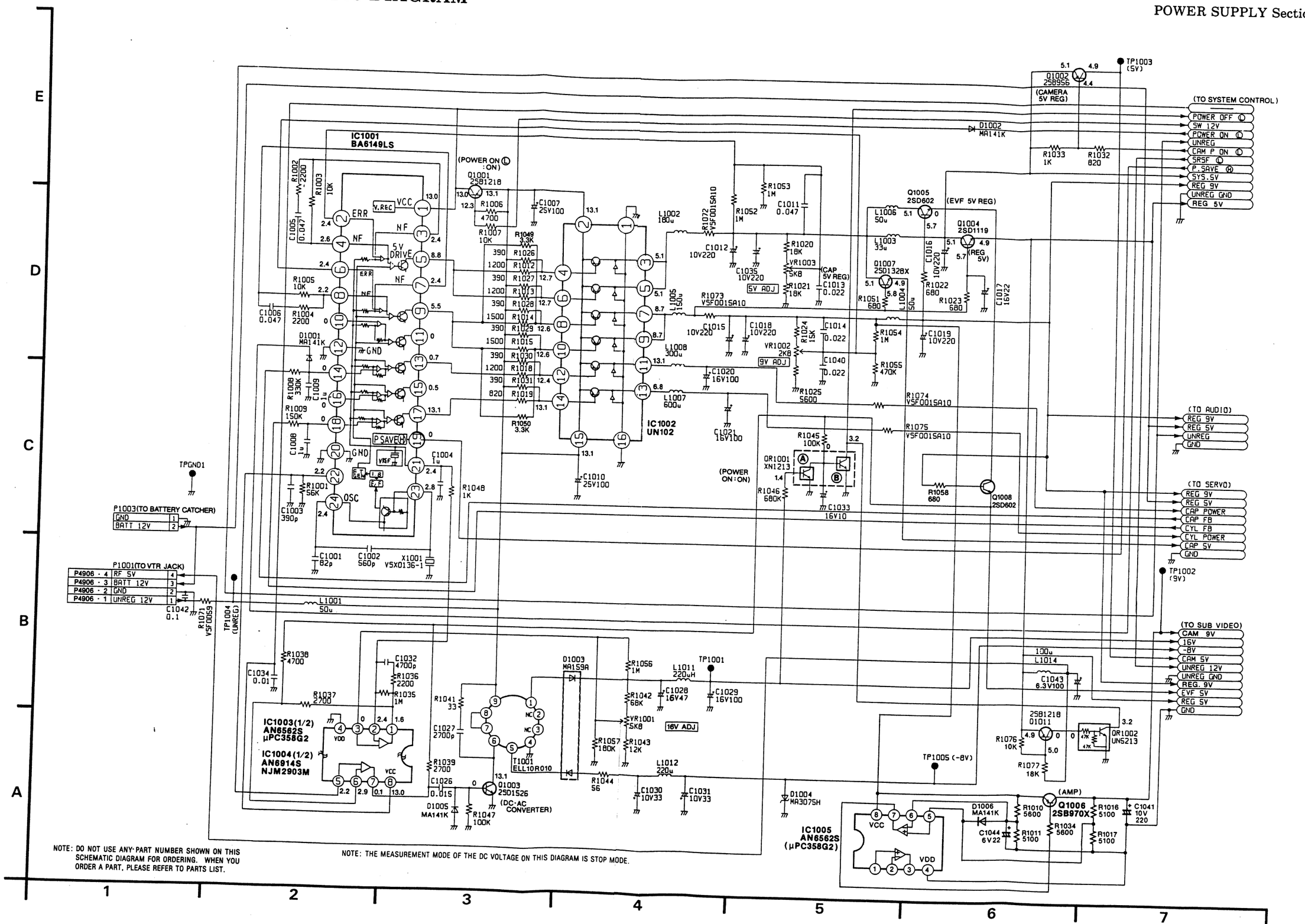

Next Page: SERVO Section

3-20. SERVO SCHEMATIC DIAGRAM

CAPSTAN SERVO SPEED LOOP.

CAPSTAN SERVO PHASE LOOP.

CYLINDER SERVO SPEED LOOP.

CYLINDER SERVO PHASE LOOP.

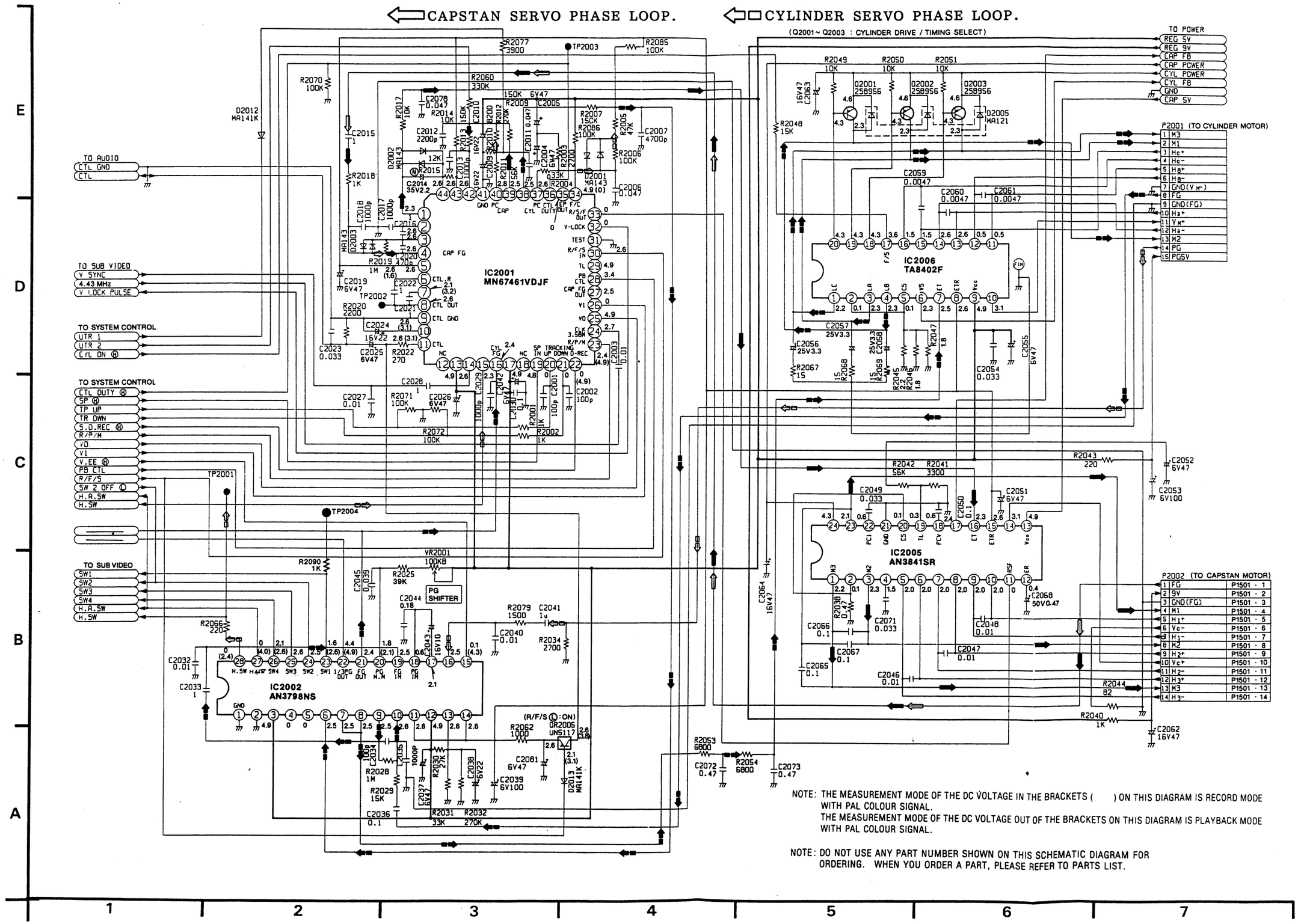

)OP. ◀■ CYLINDER SERVO SPEED LOOP.

)OP. ⇦□ CYLINDER SERVO PHASE LOOP.

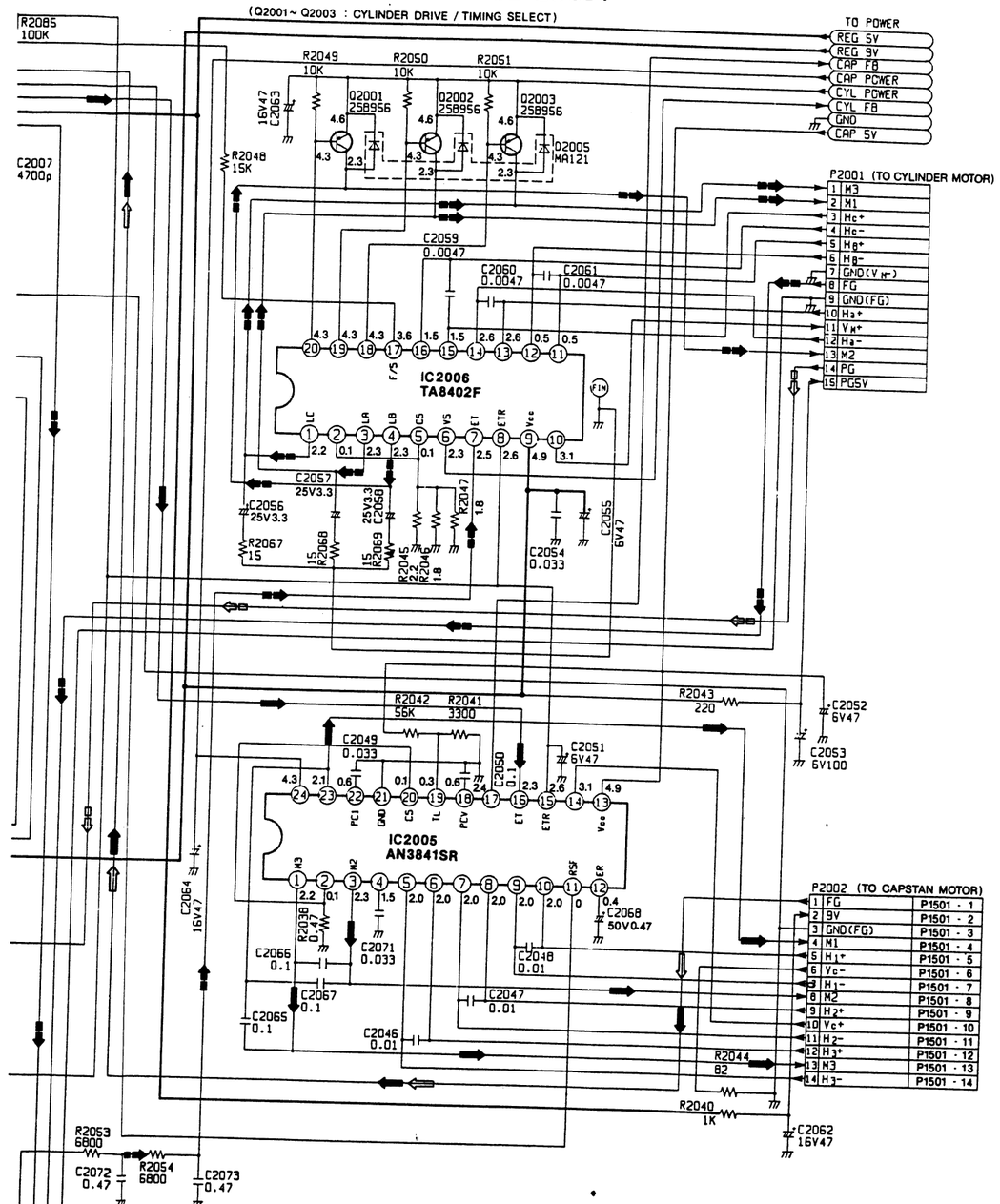

NOTE: THE MEASUREMENT MODE OF THE DC VOLTAGE IN THE BRACKETS ( ) ON THIS DIAGRAM IS RECORD MODE WITH PAL COLOUR SIGNAL.
THE MEASUREMENT MODE OF THE DC VOLTAGE OUT OF THE BRACKETS ON THIS DIAGRAM IS PLAYBACK MODE WITH PAL COLOUR SIGNAL.

NOTE: DO NOT USE ANY PART NUMBER SHOWN ON THIS SCHEMATIC DIAGRAM FOR ORDERING. WHEN YOU ORDER A PART, PLEASE REFER TO PARTS LIST.

5 6 7

SERVO CIRCUIT TP (Test Point) WAVEFORM (REF. NO. 2000 Series)

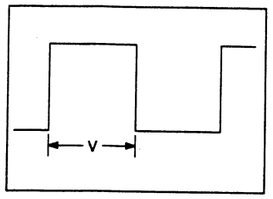

TP2001 PLAY/REC
5.0V/10msec. div. 5.0Vp-p

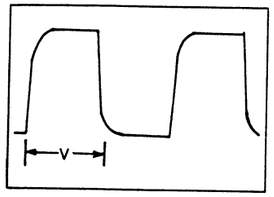

TP2002 REC
1.0V/10msec. div. 5.0Vp-p

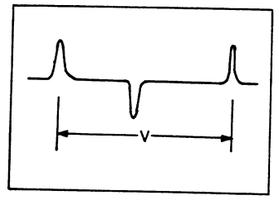

TP2002 PLAY
2.0V/10msec. div. 4.8Vp-p

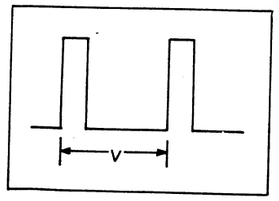

TP2004 PLAY/REC
5.0V/20msec. div. 5.0Vp-p

IC BLOCK

IC2001 (MN67461VDJF)

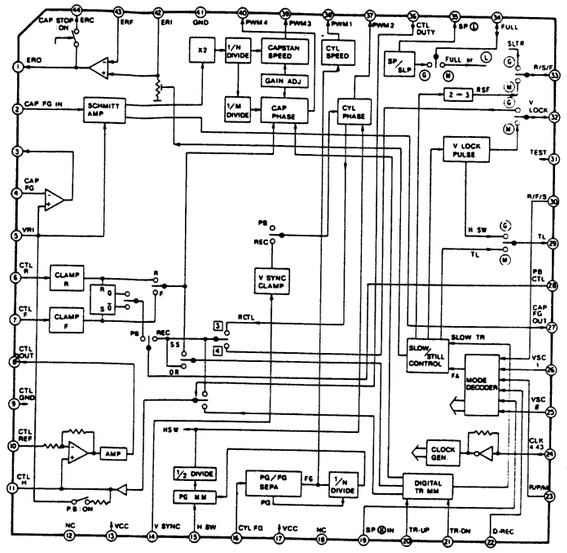

IC2002 (AN3798HS)

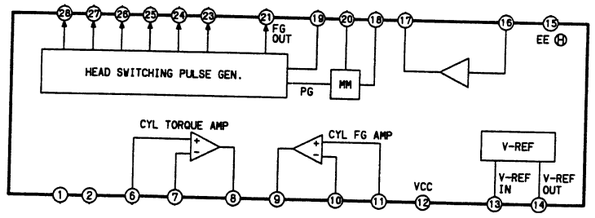

IC2006 (TA8402)

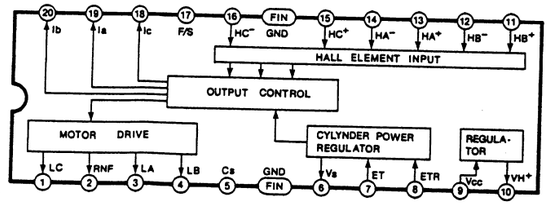

IC2006 (AN3841SR)

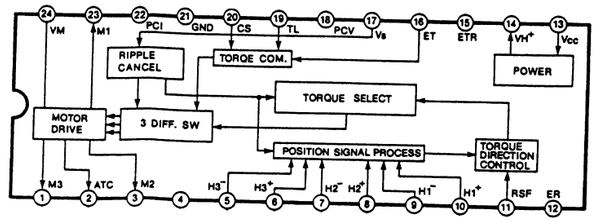

SYSTEM CONTROL ICs DC VOLTAGE CHART

REF. NO.	IC6001																			
MODE	1	2	3	4	5	6	7	8	9	10	11	12	13	14	15	16				
STOP	0	4.7	4.7	0	0	4.9	4.8	0	4.8	4.3	4.9	4.9	4.9	0	4.9	4.9				
PLAY	0	0	4.7	0	0	0	4.7	0	4.8	4.3	4.9	4.9	0	0	4.9	4.9				
F.F	0	4.7	4.7	0	0	4.8	4.7	0	4.8	4.3	4.8	4.9	4.8	0	4.9	4.9				

REF. NO.	IC6002																			
MODE	1	2	3	4	5	6	7	8	9	10	11	12	13	14	15	16	17	18	19	20
STOP	5.0	0	0	0	3.2	4.9	4.6	4.8	4.9	0	0	8.6	4.8	3.6	3.6	0	0	0	0	0.1
PLAY	5.0	0	0	0	3.2	4.9	4.6	4.8	4.8	0	0	8.6	3.8	3.6	3.6	3.4	2.3	0	0	1.0
F.F	5.0	0	0	0	3.2	4.9	4.6	4.8	4.8	0	0	6.3	4.7	3.6	3.6	0	3.9	0	0	0.7

REF. NO.	IC6002																			
MODE	21	22	23	24	25	26	27	28	29	30	31	32	33	34	35	36	37	38	39	40
STOP	0	0	0	0	4.9	2.2	1.0	3.5	0	4.9	4.7	4.7	4.7	4.9	4.7	4.9	4.9	0	0	4.5
PLAY	0.9	0	0	0	4.9	2.1	0.9	3.5	0	4.9	4.7	4.7	4.7	4.9	4.9	4.7	4.7	0	4.7	0
F.F	0	0	0	0	4.9	2.1	1.0	3.3	0	4.9	4.7	4.7	4.7	4.9	4.7	4.9	4.9	0	4.8	4.5

REF. NO.	IC6002																			
MODE	41	42	43	44	45	46	47	48	49	50	51	52	53	54	55	56	57	58	59	60
STOP	4.3	0	8.6	4.5	8.6	5.0	4.9	4.8	4.7	4.7	4.7	4.8	4.9	4.9	0	0	0	0	4.9	0
PLAY	0	4.9	8.6	4.5	8.6	5.0	3.8	4.8	4.6	4.7	4.7	4.8	4.9	4.9	0	0	0	0	4.9	0
F.F	4.3	0	8.6	4.5	8.6	5.0	4.2	4.8	4.7	4.7	4.7	4.7	4.9	4.9	0	0	0	4.9	4.9	0

REF. NO.	IC6002																			
MODE	61	62	63	64	65	66	67	68	69	70	71	72								
STOP	0	0	4.9	0	0	0	4.9	0	4.9	4.8	4.9	1.8								
PLAY	0	2.5	2.5	1.1	0	1.5	4.9	0	4.9	4.8	4.9	2.6								
F.F	0	2.5	4.9	0.1	0	0.1	4.9	0	4.9	2.5	4.9	2.5								

REF. NO.	IC6003																			
MODE	1	2	3	4	5	6	7	8	9	10	11	12	13	14						
STOP	0	0.1	0	0	0	0	0	0	0	0	0	0.3	0	0						
PLAY	0	0.2	0	0	0	0	0	0	0	0	0	0.3	0	0						
F.F	0	0	0	0	0	0.4	0	0.7	0.6	0.3	0	0.4	0	0.3						

REF. NO.	IC6004																			
MODE	1	2	3	4	5	6	7	8	9	10	11	12	13	14	15	16	17	18	19	20
STOP	5.0	4.8	0	3.7	0	5.0	1.9	2.4	2.4	0	0	0	0	0	0	0	0	0.1	0.1	5.0
PLAY	5.0	3.8	0	3.7	0	5.0	1.9	2.4	2.4	0	0	0	0	0	0	0	0	0.1	0.1	5.0
F.F	0	4.8	0	3.7	0	5.0	1.9	2.4	2.4	0	0	0	0	0	0	0	0	0	0	5.0

REF. NO.	IC6005																			
MODE	1	2	3	4	5	6	7	8	9											
STOP	7.2	13.1	0	0	0	0	0	13.1	7.2											
PLAY	7.2	13.0	1.6	0	0	0	1.0	13.0	7.2											
F.F	7.2	13.0	0	0	0	0	0	13.0	7.2											

REF. NO.	IC6006																			
MODE	1	2	3	4	5	6	7	8	9	10	11	12	13	14	15	16				
STOP	0	4.7	4.7	1.5	4.7	4.9	4.9	0	0.1	3.8	0.1	0	0	0	4.9	4.9				
PLAY	0	4.7	4.7	1.5	4.9	0	4.9	0	1.7	3.0	0.1	4.8	4.9	0	4.9	4.9				
F.F	0	4.7	4.7	1.2	4.7	4.9	4.9	0	0.1	3.0	0.1	0	0	0	4.9	4.9				

REF. NO.	IC6007																			
MODE	1	2	3																	
STOP	0	4.9	4.9																	
PLAY	0	4.9	4.9																	
F.F	0	4.9	4.9																	

REF. NO.	IC6008																			
MODE	1	2	3	4	5	6	7	8	9	10	11	12	13	14	15	16				
STOP	0	4.7	4.7	4.9	4.9	4.9	4.9	0	4.9	4.9	4.9	4.9	4.9	4.9	4.9	4.9				
PLAY	0	4.7	4.7	4.9	4.9	0	4.9	0	3.3	4.9	4.9	0	4.9	4.9	4.9	4.9				
F.F	0	4.7	4.7	0	4.9	4.9	4.9	0	3.3	4.4	4.9	0	4.9	4.9	4.9	4.9				

SYSTEM CONTROL TRANSISTORs DC VOLTAGE CHART

REF. NO.	Q6001			Q6002			Q6003			Q6004			Q6005			Q6007(A)		
MODE	E	C	B	E	C	B	E	C	B	E	C	B	E	C	B	E	C	B
STOP	13.1	7.2	13.1	8.7	8.7	8.0	0	3.6	0.1	7.2	13.1	7.8	−0.5	13.1	0.1	0	4.9	0
PLAY	13.0	7.1	13.0	8.6	8.6	7.9	0	3.6	0.1	7.2	13.0	7.8	−1.0	13.0	−0.5	0	4.9	0
F.F	13.0	7.2	13.0	8.6	8.6	7.9	0	3.6	0.1	7.1	13.0	7.8	2.7	12.1	2.8	0	4.9	0
REF. NO.	Q6007(B)																	
MODE	E	C	B															
STOP	0	4.9	0															
PLAY	0	4.9	0															
F.F	0	4.9	0															
REF. NO.	QR6001(A)			QR6001(B)			QR6002			QR6003(A)			QR6003(B)			QR6004		
MODE	E	C	B	E	C	B	E	C	B	E	C	B	E	C	B	E	C	B
STOP	0	0	4.9	4.9	4.8	0	0	0	7.2	4.7	4.4	4.8	4.7	4.4	4.9	0	10.1	0
PLAY	0	5.0	0	4.9	4.8	0	0	0	7.1	4.7	4.4	4.8	4.7	4.4	2.3	0	10.0	0
F.F	0	0	4.9	4.9	4.8	0	0	0	7.1	4.7	4.5	4.8	4.7	4.4	4.8	0	10.0	0
REF. NO.	QR6005			QR6006(A)			QR6006(B)			QR6009			QR6010			Q6011(A)		
MODE	E	C	B	E	C	B	E	C	B	E	C	B	E	C	B	E	C	B
STOP	4.7	4.4	4.9	4.9	4.6	4.9	4.9	4.6	4.9	4.7	4.6	0	0	0	13.4	4.7	4.5	3.9
PLAY	4.7	4.6	4.9	4.9	4.6	4.9	4.9	4.6	4.9	4.7	5.2	0	0	0	13.4	4.7	5.0	2.3
F.F	4.7	4.4	4.8	4.9	4.6	4.9	4.9	4.6	4.9	4.7	4.6	0	0	0	13.4	4.7	4.7	3.9
REF. NO.	QR6011(B)			QR6014(A)			QR6014(B)			QR6017			QR6019(A)			QR6019(B)		
MODE	E	C	B	E	C	B	E	C	B	E	C	B	E	C	B	E	C	B
STOP	4.7	4.6	0	4.7	4.6	0.5	4.7	4.7	0.6	4.9	4.9	0	4.9	0	4.9	4.9	1.9	4.9
PLAY	4.6	5.2	3.6	4.7	5.2	0.5	4.7	5.2	0.6	4.9	0.1	4.9	4.9	0	4.9	4.9	2.9	4.9
F.F	4.7	4.6	0	4.7	4.6	0.5	4.7	4.7	0.6	4.9	4.9	0	4.9	0	4.9	4.9	0.1	4.9
REF. NO.	QR6020(A)			QR6020(B)			QR6022			QR6027			QR6029			QR6030		
MODE	E	C	B	E	C	B	E	C	B	E	C	B	E	C	B	E	C	B
STOP	0	0	0	0	0	0	8.7	0	8.6	−0.2	4.7	0.2	0	8.0	0	0	0	4.9
PLAY	0	2.2	0	0	2.2	3.5	8.7	0	8.6	−1.2	4.8	−1.2	0	8.0	0	0	1.8	0
F.F	0	0	0	0	0	0	8.6	2.8	6.8	−1.9	5.5	−1.9	0	8.0	0	0	0	4.9
REF. NO.	QR6031(A)			QR6031(B)			QR6032(A)			QR6032(B)			QR6033(A)			QR6033(B)		
MODE	E	C	B	E	C	B	E	C	B	E	C	B	E	C	B	E	C	B
STOP	4.9	−0.1	4.9	4.9	0	4.9	4.9	−0.1	4.9	4.9	−0.1	4.9	4.9	0.1	4.9	4.9	0.1	4.9
PLAY	4.9	−0.5	4.9	4.9	0.5	4.9	4.9	−0.7	4.9	4.9	−0.6	4.9	4.9	0	4.9	4.9	4.8	0
F.F	4.9	−0.6	4.9	4.9	0	4.9	4.9	4.8	0	4.9	0	4.9	4.9	−0.5	4.9	4.9	−0.4	4.9
REF. NO.	QR6034																	
MODE	E	C	B															
STOP	4.9	0	4.9															
PLAY	4.9	−1.0	4.9															
F.F	4.9	0	4.9															

3-21. SYSTEM CONTROL SCHEMATIC DIAGRAM

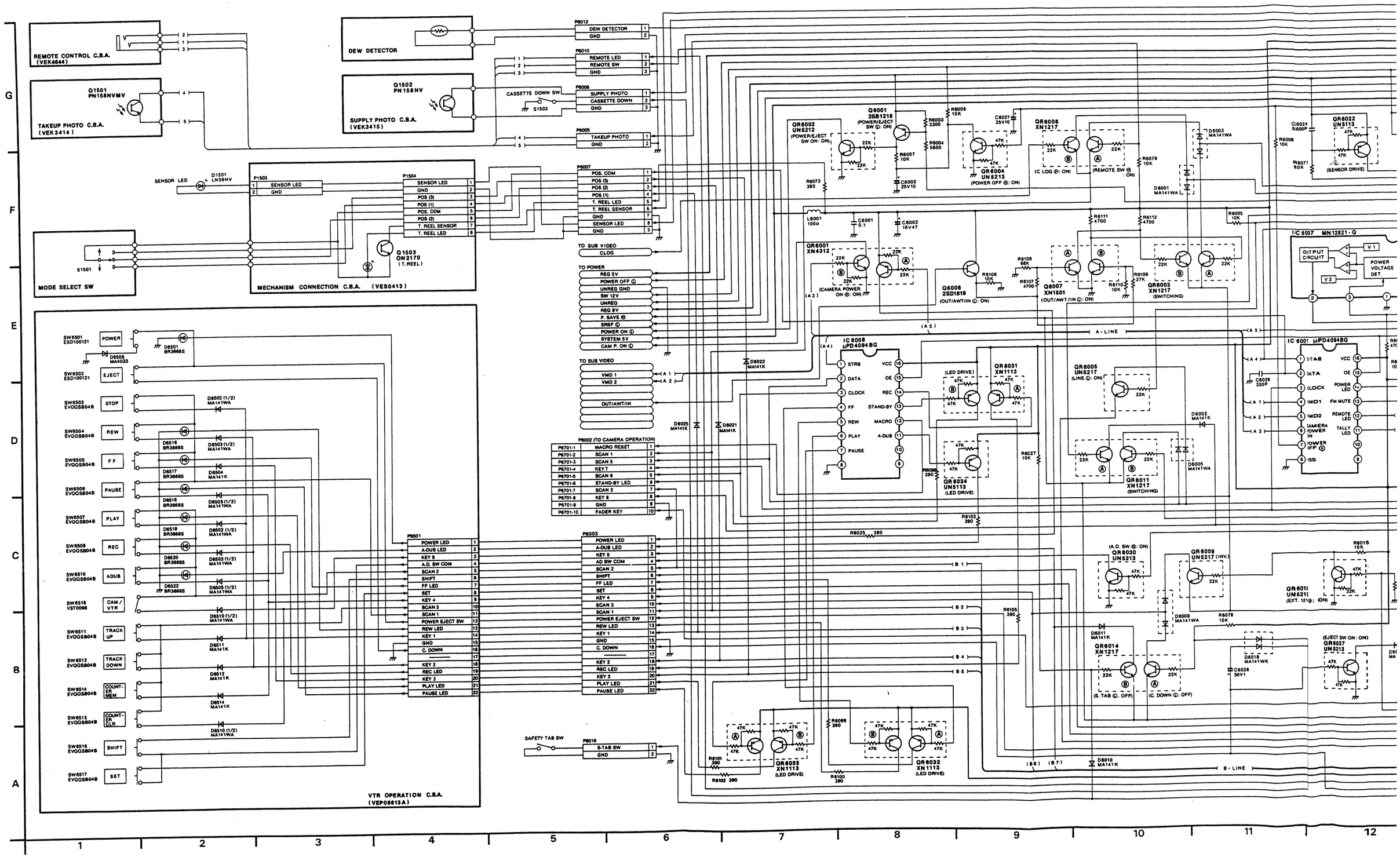

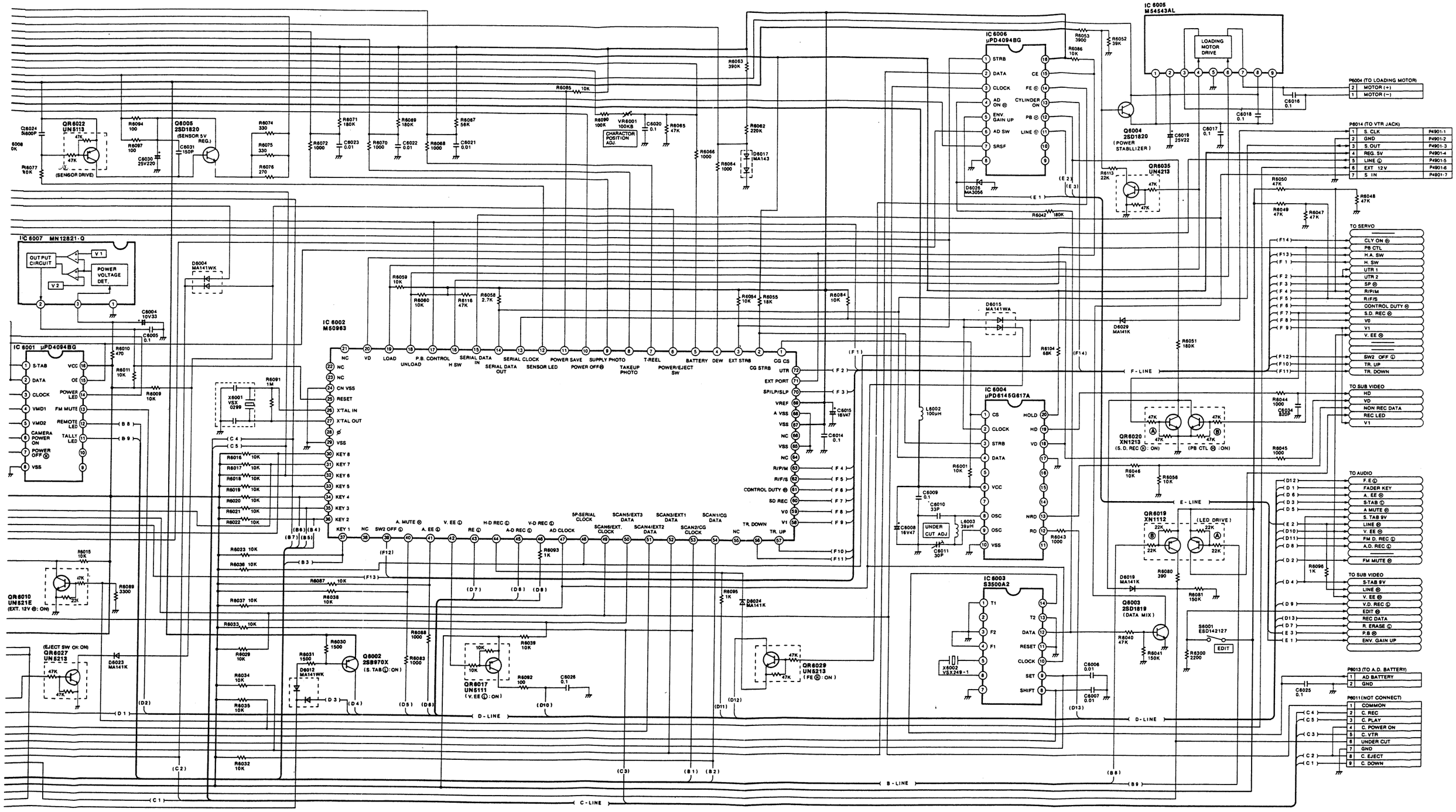

NOTE: DO NOT USE ANY PART NUMBER SHOWN ON THIS SCHEMATIC DIAGRAM FOR ORDERING. WHEN YOU ORDER A PART, PLEASE REFER TO PARTS LIST.

3-22. AUDIO SCHEMATIC DIAGRAM

MAIN SIGNAL PATH IN REC MODE

MAIN SIGNAL PATH IN PLAYBACK MODE

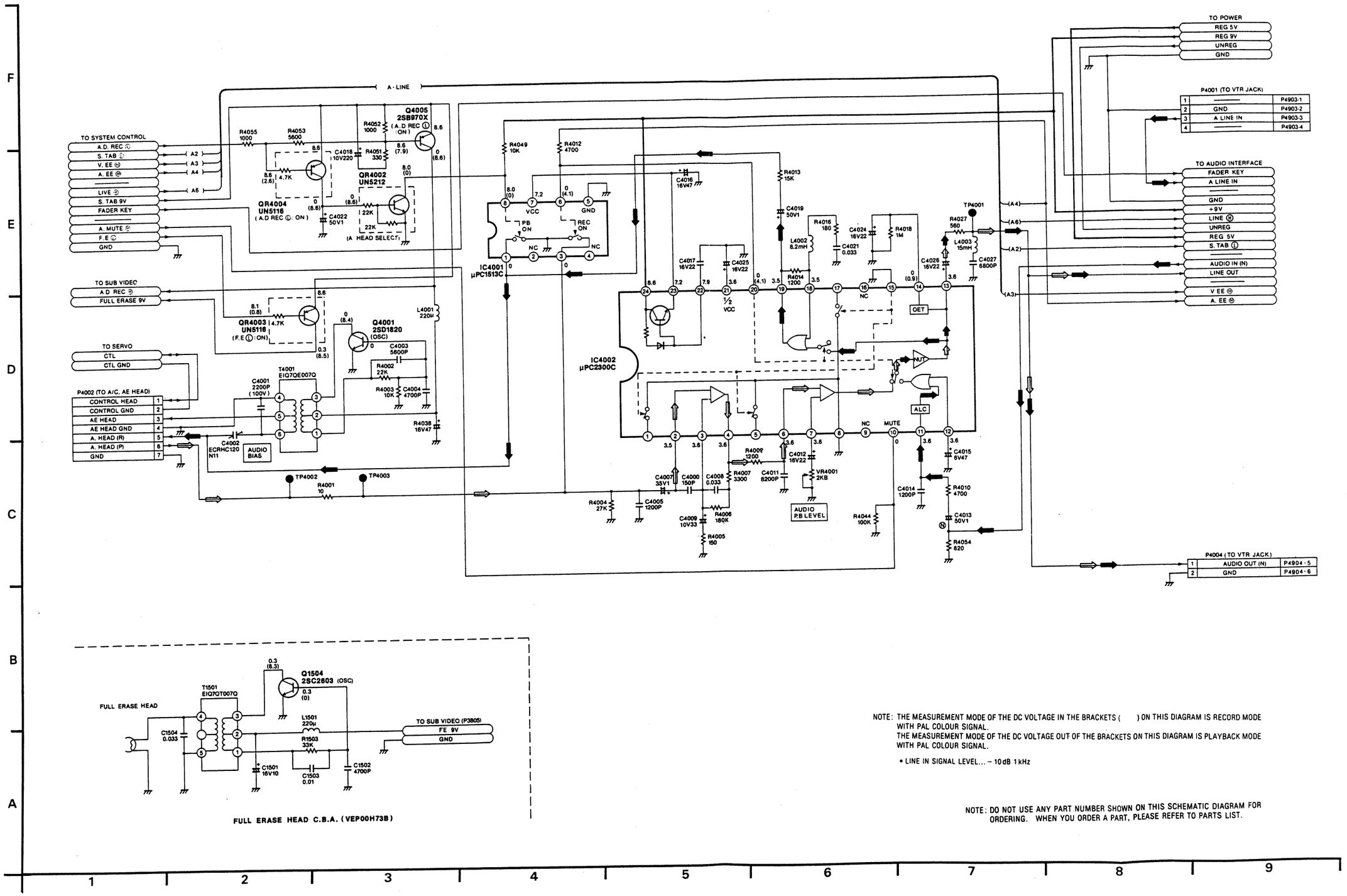

FULL ERASE HEAD C.B.A. (VEP00H73B)

NOTE: THE MEASUREMENT MODE OF THE DC VOLTAGE IN THE BRACKETS ( ) ON THIS DIAGRAM IS RECORD MODE WITH PAL COLOUR SIGNAL.
THE MEASUREMENT MODE OF THE DC VOLTAGE OUT OF THE BRACKETS ON THIS DIAGRAM IS PLAYBACK MODE WITH PAL COLOUR SIGNAL.

• LINE IN SIGNAL LEVEL... – 10dB 1kHz

NOTE: DO NOT USE ANY PART NUMBER SHOWN ON THIS SCHEMATIC DIAGRAM FOR ORDERING. WHEN YOU ORDER A PART, PLEASE REFER TO PARTS LIST.

3-23. AUDIO IN

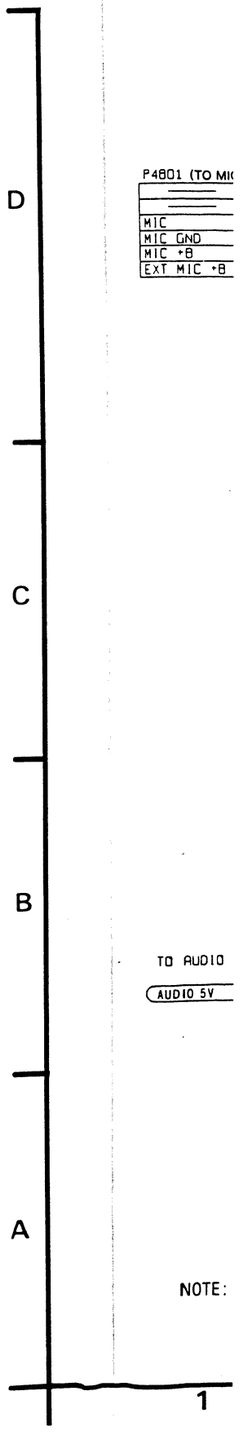

Back Page:
SYSTEM CONTROL Section

3-23. AUDIO INTERFACE SCHEMATIC DIAGRAM

MAIN SIGNAL PATH IN REC MODE

MAIN SIGNAL PATH IN PLAYBACK MODE

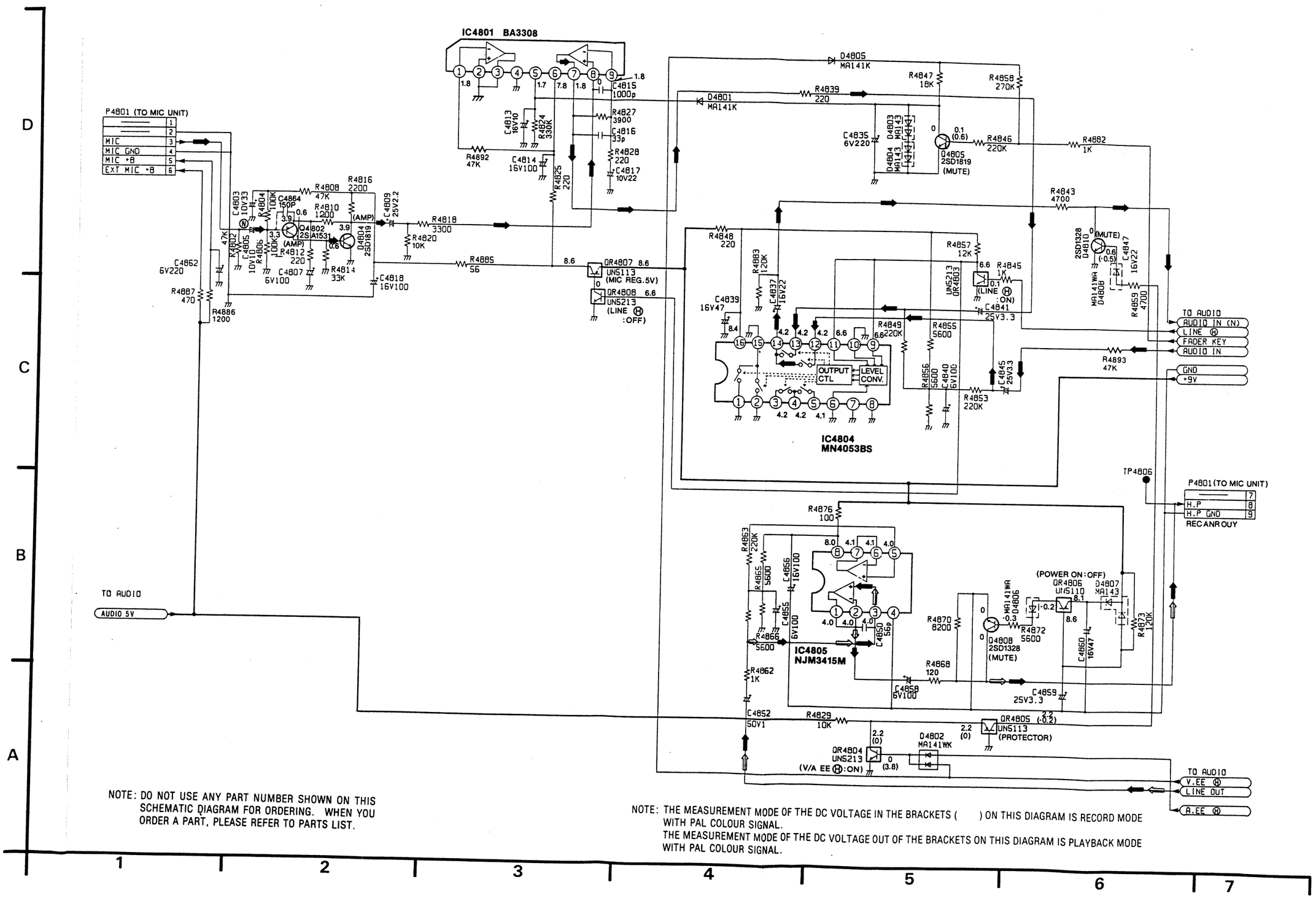

AUDIO CIRCUIT TP (Test Point) WAVEFORM (REF. NO. 4000 Ser

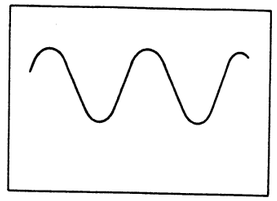

TP4001 PLAY/REC
0.5V/0.5msec. div. 1.0Vp-p

AUDIO INTERFACE CIRCUIT TP (Test Point) WAVEFORM (REF. NO. 4800 Servies)

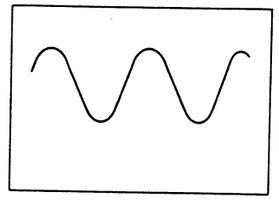

TP4806
0.5V/0.5msec. div. 1.5Vp-p

NOTE: DO NOT USE ANY PART NUMBER SHOWN ON THIS SCHEMATIC DIAGRAM FOR ORDERING. WHEN YOU ORDER A PART, PLEASE REFER TO PARTS LIST.

NOTE: THE MEASUREMENT MODE OF THE DC VOLTAGE IN THE BRACKETS ( ) ON THIS DIAGRAM IS RECORD MODE WITH PAL COLOUR SIGNAL.
THE MEASUREMENT MODE OF THE DC VOLTAGE OUT OF THE BRACKETS ON THIS DIAGRAM IS PLAYBACK MODE WITH PAL COLOUR SIGNAL.

3-24. SUB VIDEO & HEAD AMP SCHEMATIC DIAGRAM

MAIN SIGNAL PATH IN REC MODE

MAIN SIGNAL PATH IN PLAYBACK MODE

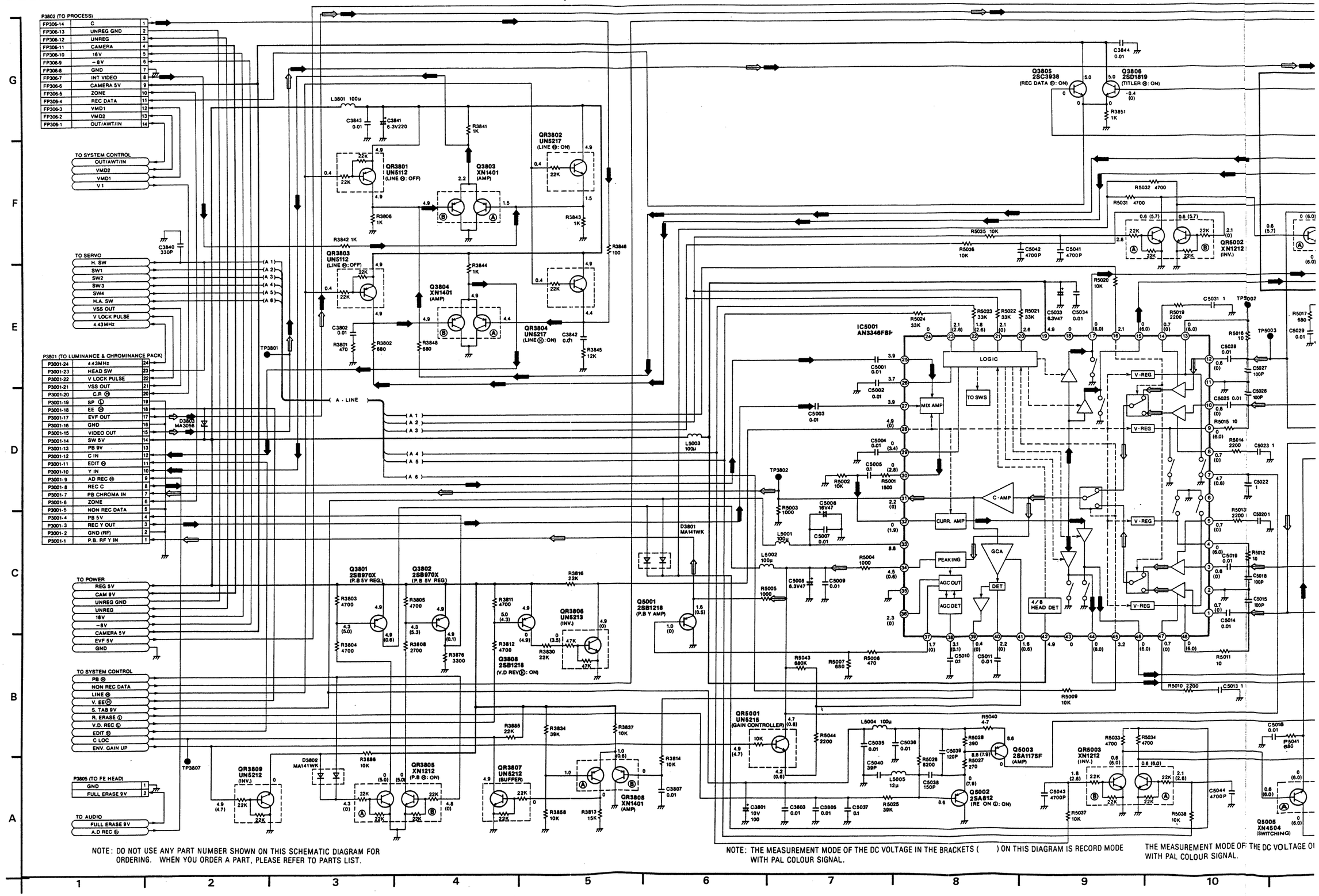

NOTE: DO NOT USE ANY PART NUMBER SHOWN ON THIS SCHEMATIC DIAGRAM FOR ORDERING. WHEN YOU ORDER A PART, PLEASE REFER TO PARTS LIST.

NOTE: THE MEASUREMENT MODE OF THE DC VOLTAGE IN THE BRACKETS ( ) ON THIS DIAGRAM IS RECORD MODE WITH PAL COLOUR SIGNAL.

THE MEASUREMENT MODE OF THE DC VOLTAGE OI WITH PAL COLOUR SIGNAL.

MAIN SIGNAL PATH IN REC MODE

MAIN SIGNAL PATH IN PLAYBACK MODE

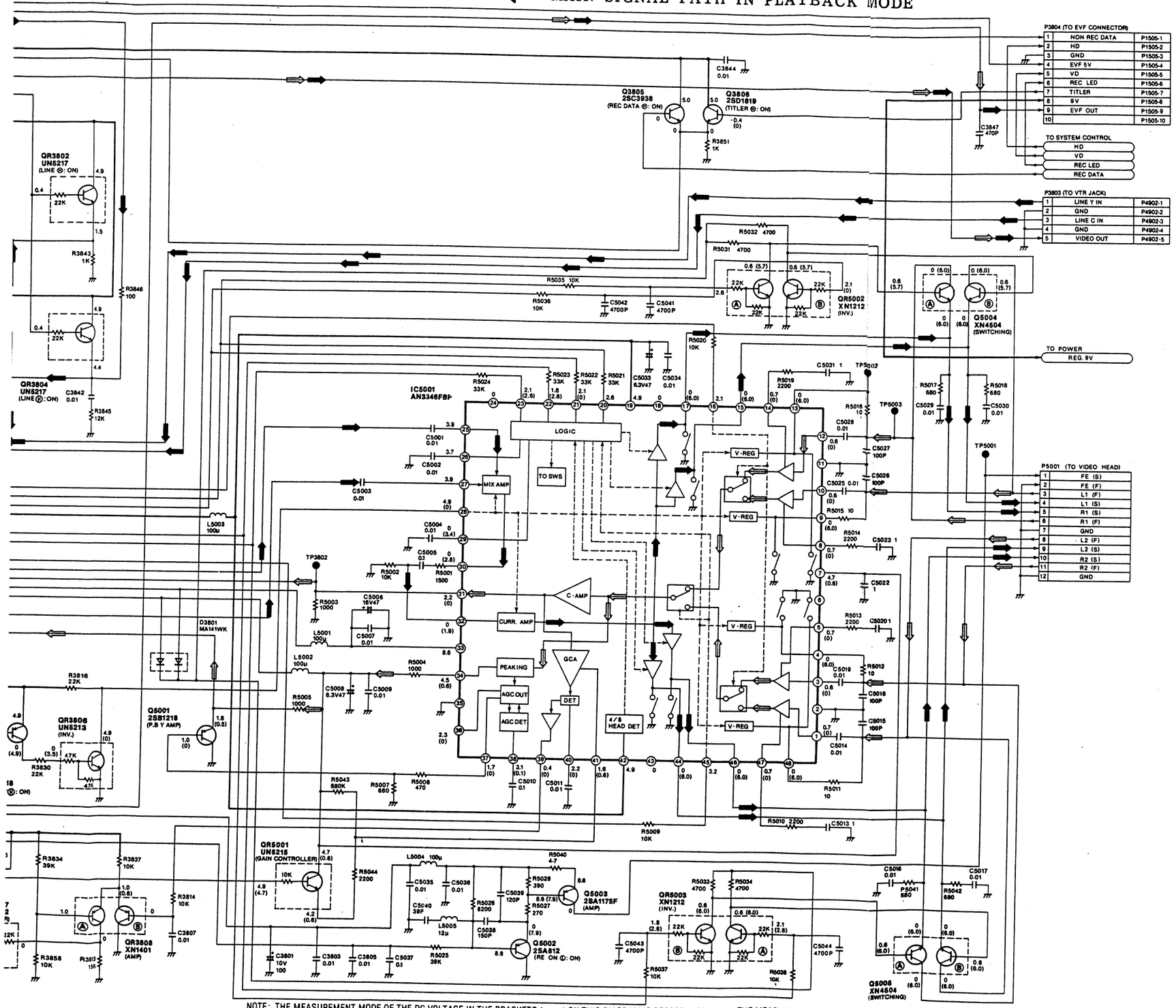

NOTE: THE MEASUREMENT MODE OF THE DC VOLTAGE IN THE BRACKETS ( ) ON THIS DIAGRAM IS RECORD MODE WITH PAL COLOUR SIGNAL.

THE MEASUREMENT MODE OF THE DC VOLTAGE OUT OF THE BRACKETS ON THIS DIAGRAM IS PLAYBACK MODE WITH PAL COLOUR SIGNAL.

5 6 7 8 9 10 11 12

SUB VIDEO CIRCUIT TP (Test Point) WAVEFORM (REF. NO. 3800 Series)

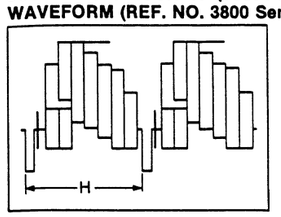

TP3801 REC
0.5V/20μsec. div. 1.2Vp-p

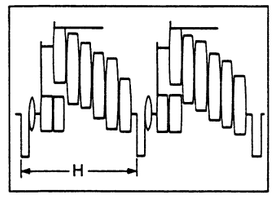

TP3801 PLAY
0.5V/20μsec. div. 1.3Vp-p

Next Page:
LUMINANCE & CHROMINANCE Section

3-25. LUMINANCE & CHROMINANCE C.B.A. (VEP03676C)

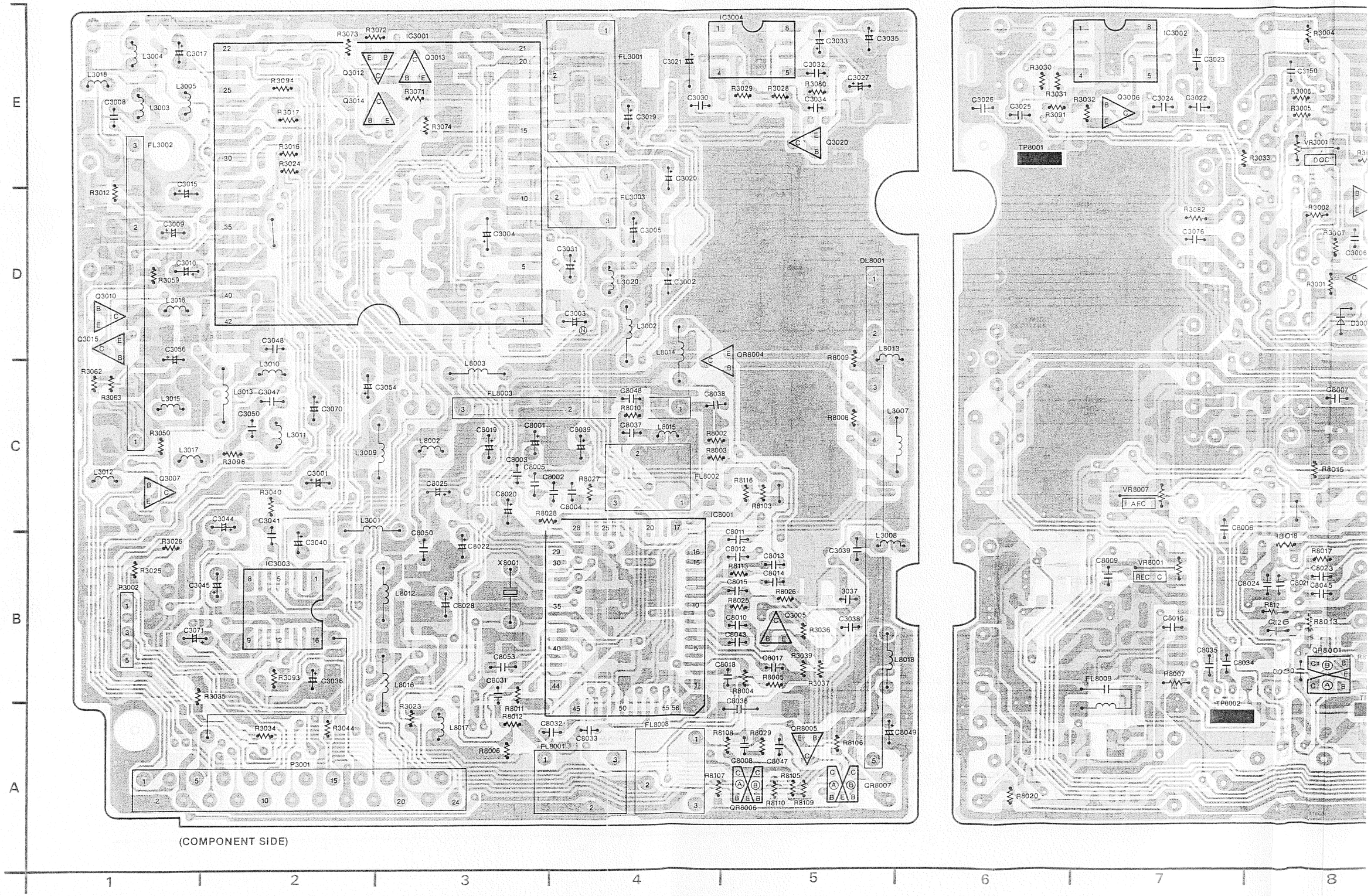

(COMPONENT SIDE)

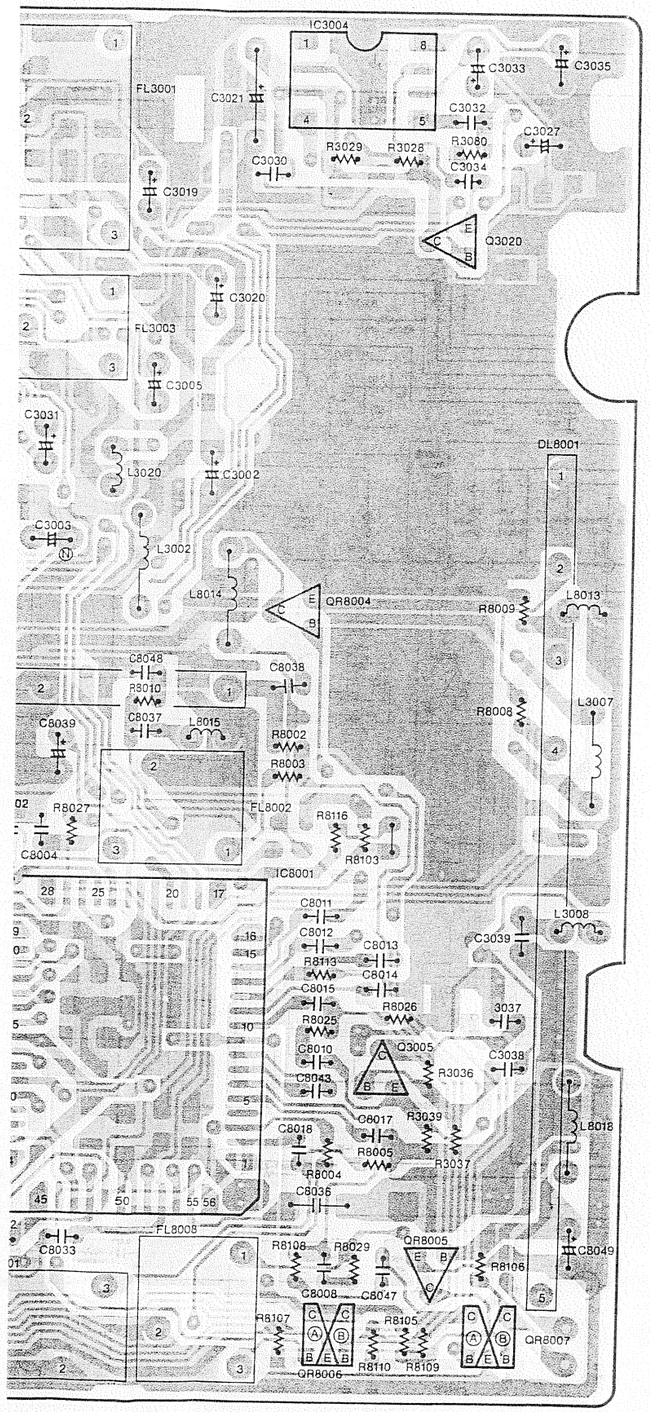

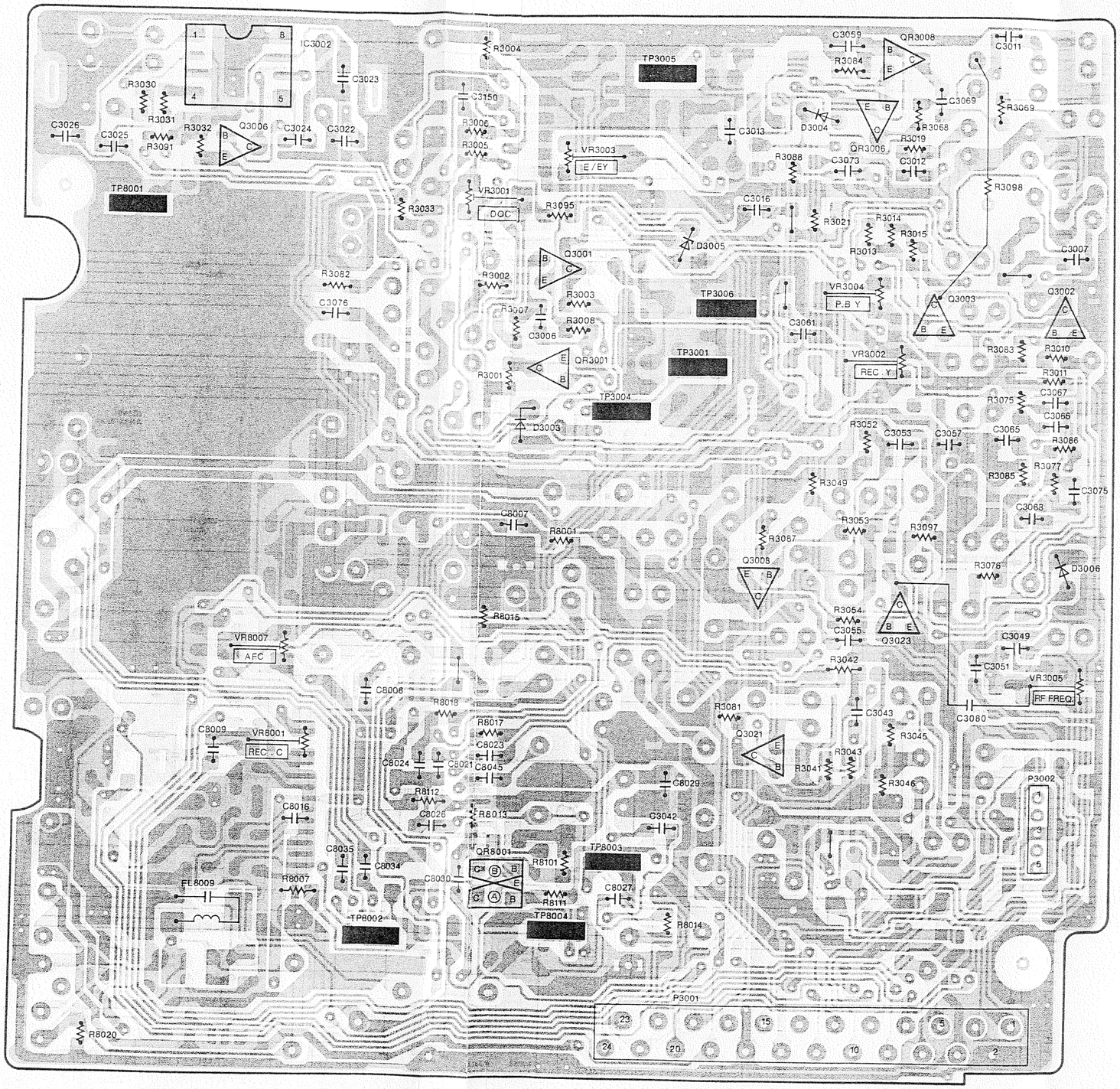

(FOIL SIDE)

LUMINANCE & CHROMINANCE C.B.A.		
Transistor		
Q3001	D-8	Ⓕ
Q3002	D-10	Ⓕ
Q3003	D-10	Ⓕ
Q3005	B-5	Ⓒ
Q3006	E-7	Ⓕ
Q3007	C-1	Ⓒ
Q3008	C-9	Ⓕ
Q3010	D-1	Ⓒ
Q3012	E-2	Ⓒ
Q3013	E-3	Ⓒ
Q3014	E-2	Ⓒ
Q3015	D-1	Ⓒ
Q3020	E-5	Ⓒ
Q3021	B-9	Ⓕ
Transistor & Resistor		
QR3001	D-8	Ⓕ
QR3006	E-10	Ⓕ
QR3008	E-10	Ⓕ
QR8001	B-8	Ⓕ
QR8004	D-5	Ⓒ
QR8005	A-5	Ⓒ
QR8006	A-5	Ⓒ
QR8007	A-5	Ⓒ
Integrated Circuit		
IC3001	E-3	Ⓒ
IC3002	E-7	Ⓕ
IC3003	B-2	Ⓒ
IC3004	E-5	Ⓒ
IC8001	B-4	Ⓒ
Test Point		
TP3001	D-9	Ⓕ
TP3004	D-8	Ⓕ
TP3005	E-9	Ⓕ
TP3006	D-9	Ⓕ
TP8001	E-6	Ⓕ
TP8002	A-7	Ⓕ
TP8003	B-8	Ⓕ
TP8004	A-8	Ⓕ
Adjustment		
VR3001	E-8	Ⓕ
VR3002	D-10	Ⓕ
VR3003	E-8	Ⓕ
VR3004	D-10	Ⓕ
VR3005	C-10	Ⓕ
VR8001	B-7	Ⓕ
VR8007	C-7	Ⓕ
Connector		
P3001	A-2	Ⓒ
P3001	A-9	Ⓕ
P3002	B-1	Ⓒ
P3002	B-10	Ⓕ

ADDRESS INFORMATION
Ⓒ... COMPONENT SIDE
Ⓕ... FOIL SIDE

3-26. LUMINANCE & CHROMINANCE SCHEMATIC DIAGRAM

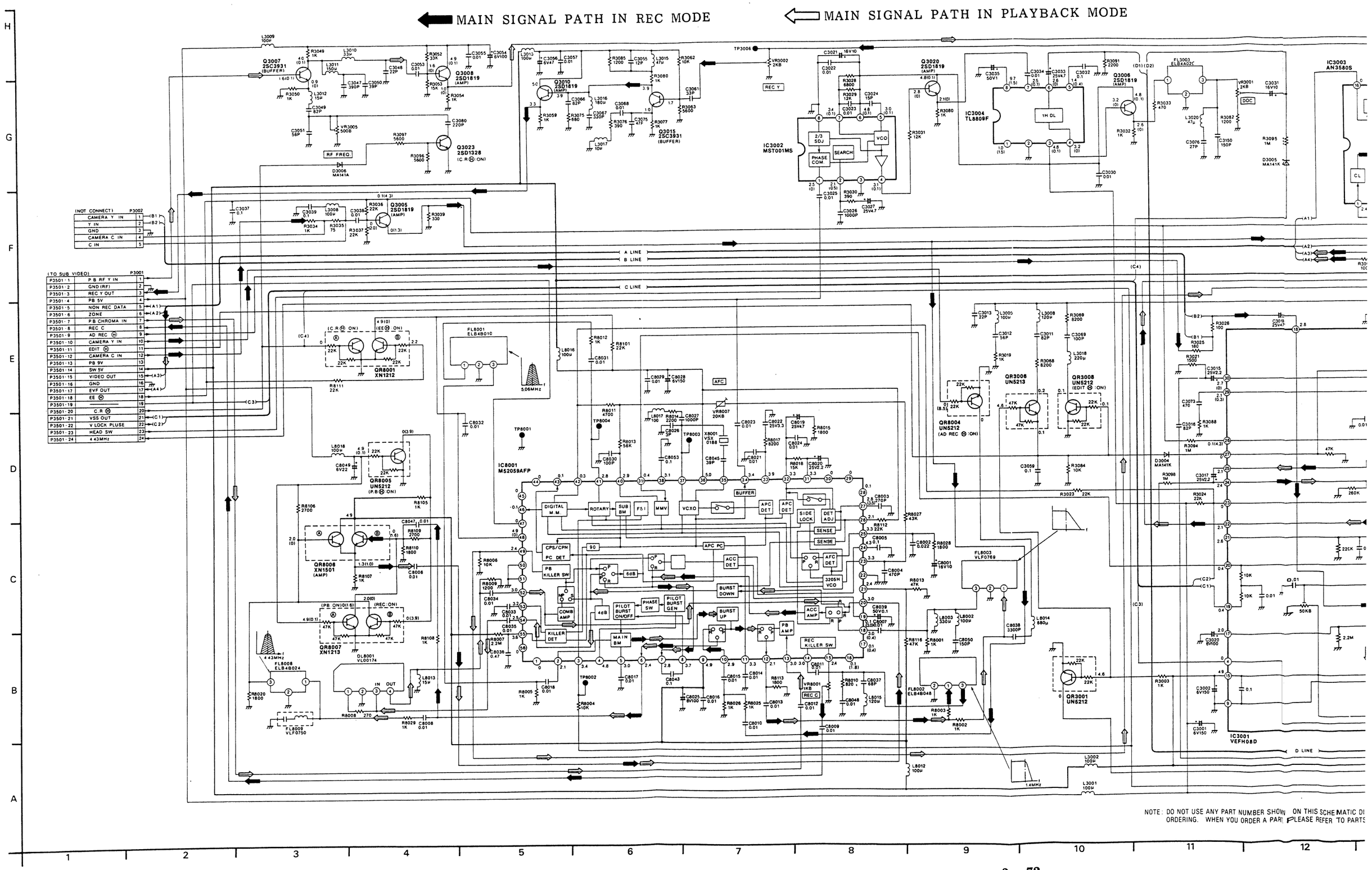

NOTE: DO NOT USE ANY PART NUMBER SHOWN ON THIS SCHEMATIC DI
ORDERING. WHEN YOU ORDER A PART PLEASE REFER TO PARTS

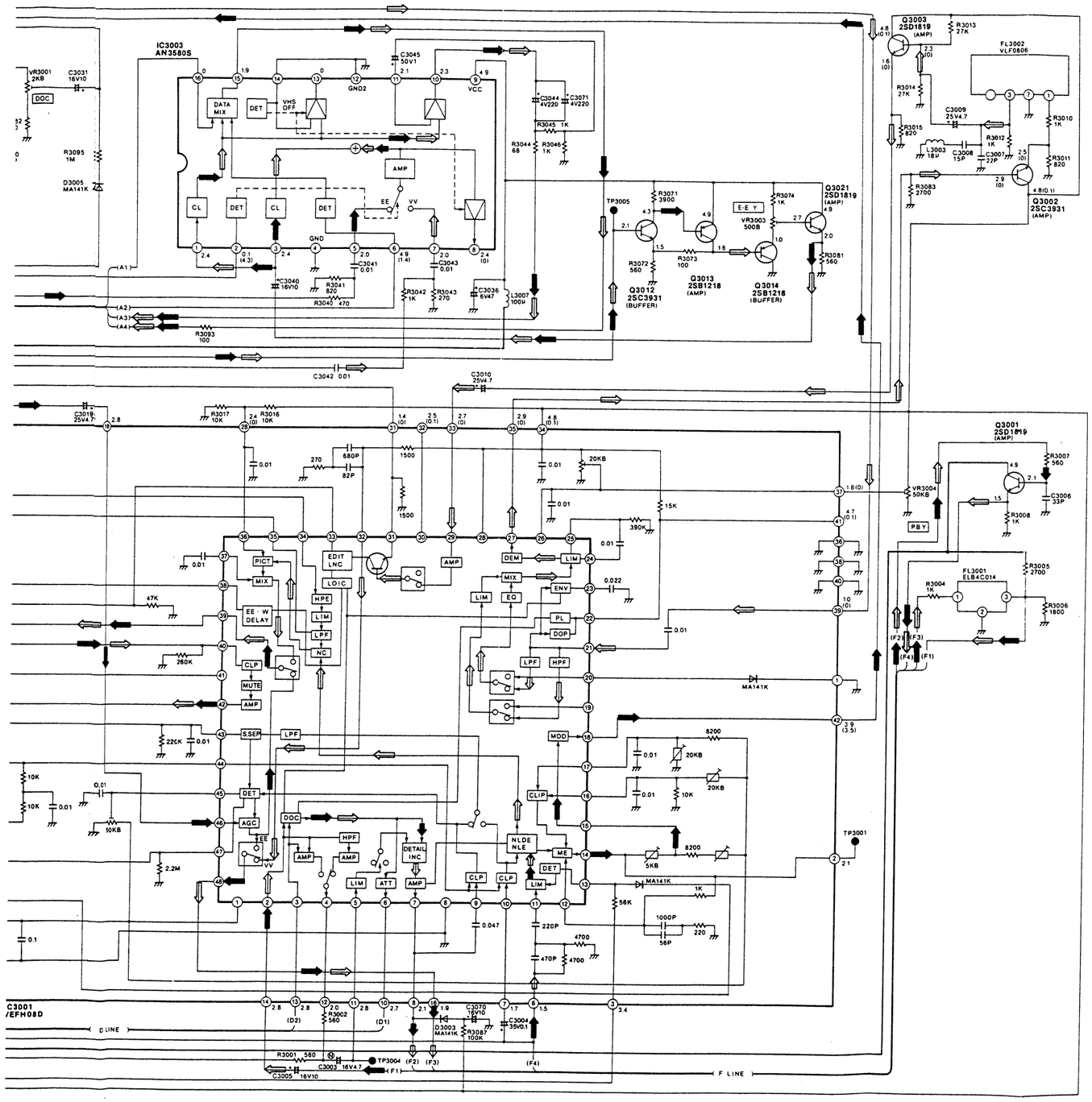

T NUMBER SHOWN ON THIS SCHEMATIC DIAGRAM FOR
OU ORDER A PART, PLEASE REFER TO PARTS LIST.

NOTE: THE MEASUREMENT MODE OF THE DC VOLTAGE IN THE BRACKETS ( ) ON THIS DIAGRAM IS RECORD MODE WITH PAL COLOUR SIGNAL.
THE MEASUREMENT MODE OF THE DC VOLTAGE OUT OF THE BRACKETS ON THIS DIAGRAM IS PLAYBACK MODE WITH PAL COLOUR SIGNAL.

12 13 14 15 16 17 18

IC3001 (VEFH08D)

PIN NO.	WAVEFORM	PIN NO.	WAVEFORM
2	0.7Vp-p (REC)	19	1.0Vp-p (REC/P.B)
3	4.0Vp-p (REC/P.B)	20	4.5Vp-p (REC/P.B)
6	0.8Vp-p (REC) 0.9Vp-p (P.B)	21	0.4Vp-p (REC) 0.45Vp-p (P.B)
7	0.8Vp-p (REC) 0.9Vp-p (P.B)	22	2.2Vp-p (REC/P.B)
8	0.8Vp-p (REC) 0.9Vp-p (P.B)	24, 25	0.8Vp-p (REC) 0.85Vp-p (P.B)
10	0.36Vp-p (REC) 0.4Vp-p (P.B)	31	0.85Vp-p (P.B)
13	0.45Vp-p (P.B)	33	0.3Vp-p (P.B)
14	0.4Vp-p (REC) 0.45Vp-p (P.B)	35	1.5Vp-p (P.B)
16	0.8Vp-p (REC) 0.9Vp-p (P.B)	39	0.6Vp-p (P.B)
18	0.8Vp-p (REC) 0.9Vp-p (P.B)	42	1.4Vp-p (REC)

LUMINANCE CIRCUIT TP (Test Point) WAVEFORM (REF. NO. 3000 Series)

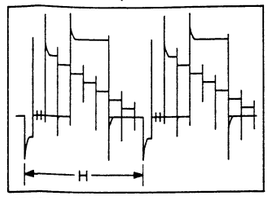

TP3001 REC
0.2V/20μsec. div. 0.7Vp-p

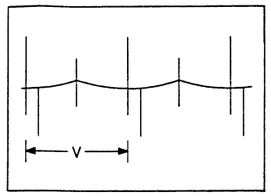

TP3004 PLAY
0.2V/10msec. div. 0.6Vp-p

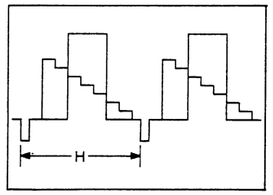

TP3005 REC/PLAY
0.5V/20μsec. div. 1.2Vp-p

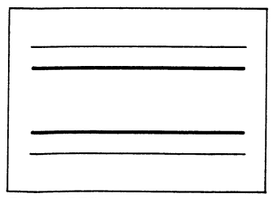

TP3006 REC
0.5V/20μsec. div. 1.4Vp-p

CHROMINANCE CIRCUIT TP (Test Point) WAVEFORM (REF. NO. 8000 Series)

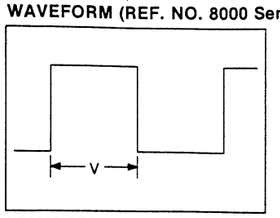

TP8002 REC/PLAY
0.2V/10msec. div. 0.4Vp-p

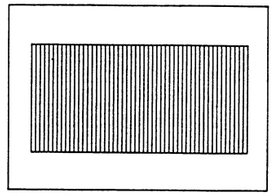

TP8003 0.2V/20μsec. div.
REC: 0.51Vp-p
PLAY: 0.62Vp-p

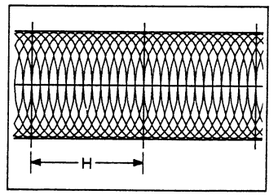

TP8004 REC/PLAY
0.5V/20μsec. div. 1.1Vp-p

3-27. VTR JACK SCHEMATIC DIAGRAM

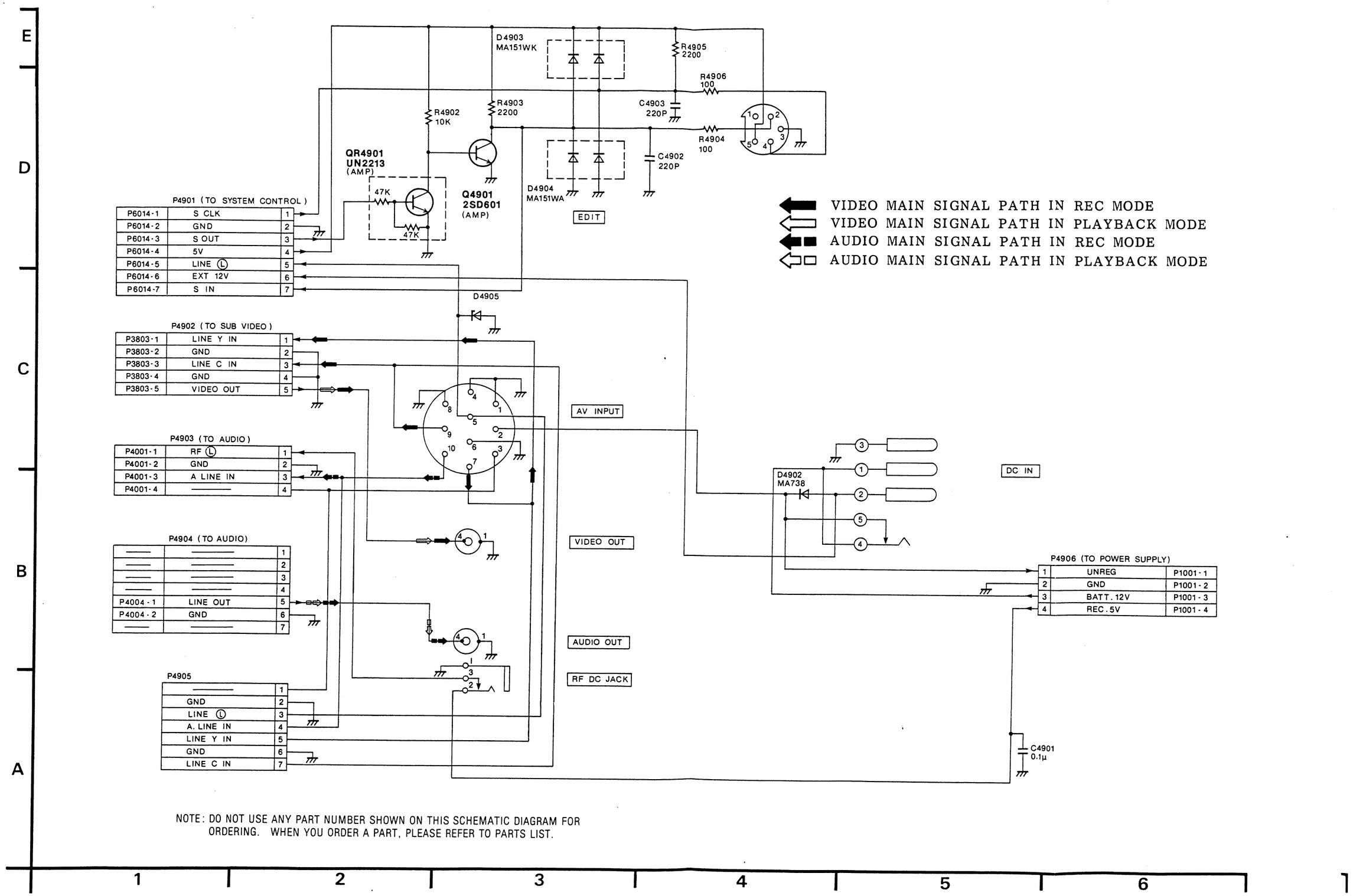

NOTE: DO NOT USE ANY PART NUMBER SHOWN ON THIS SCHEMATIC DIAGRAM FOR ORDERING. WHEN YOU ORDER A PART, PLEASE REFER TO PARTS LIST.

Back Page:
LUMINANCE & CHROMINANCE Section

3-28. VTR JACK C.B.A. (VEP04281B)

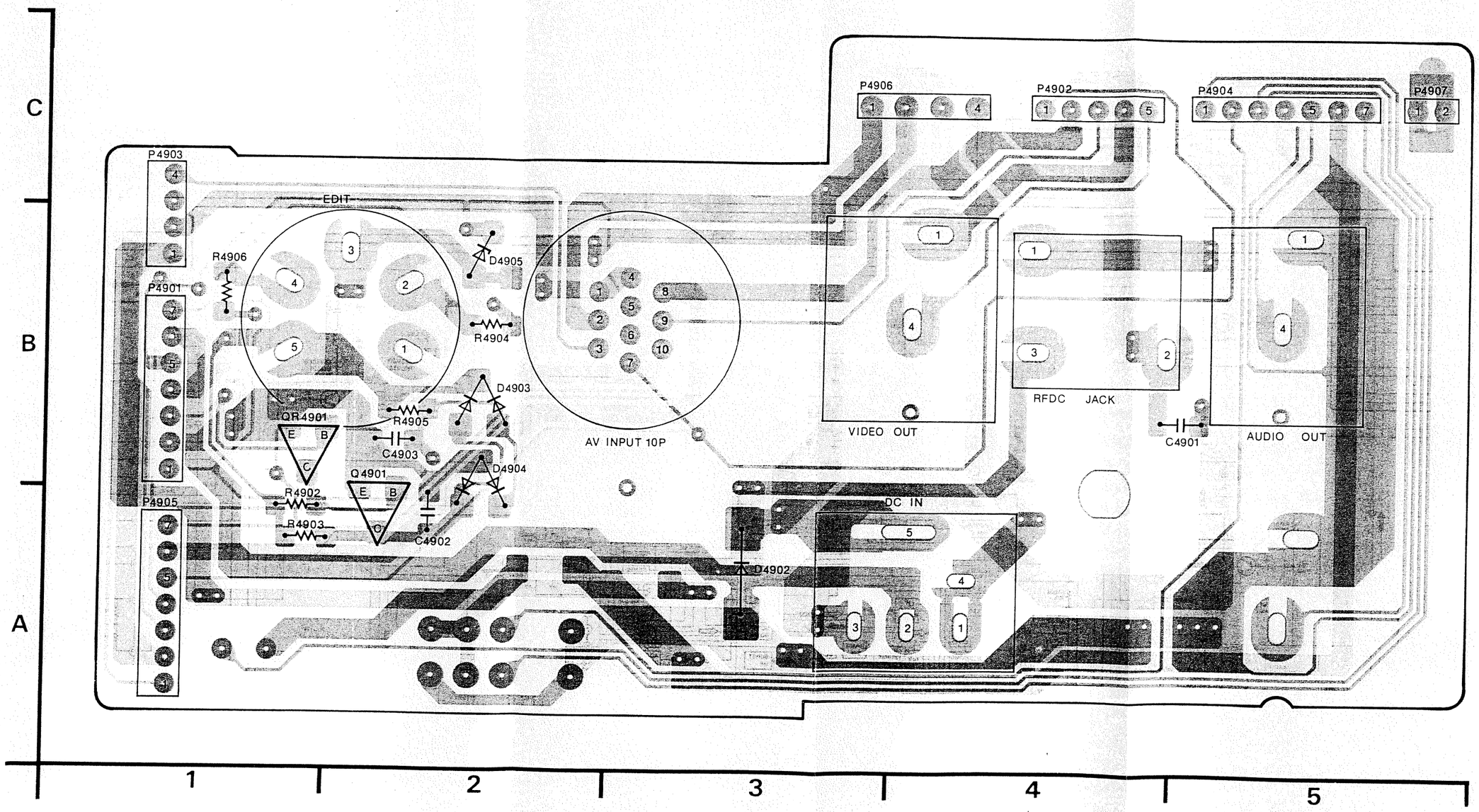

VTR JACK C.B.A.	
Transistor	
Q4901	B-2
Transistor & Resistor	
QR4901	B-2
Connector	
P4901	B-1
P4902	C-4
P4903	C-1
P4904	C-5
P4905	A-1
P4906	C-3
P4907	C-5

ADDRESS INFORMATION

3-29. CIRCUIT BOARD LAYOUT

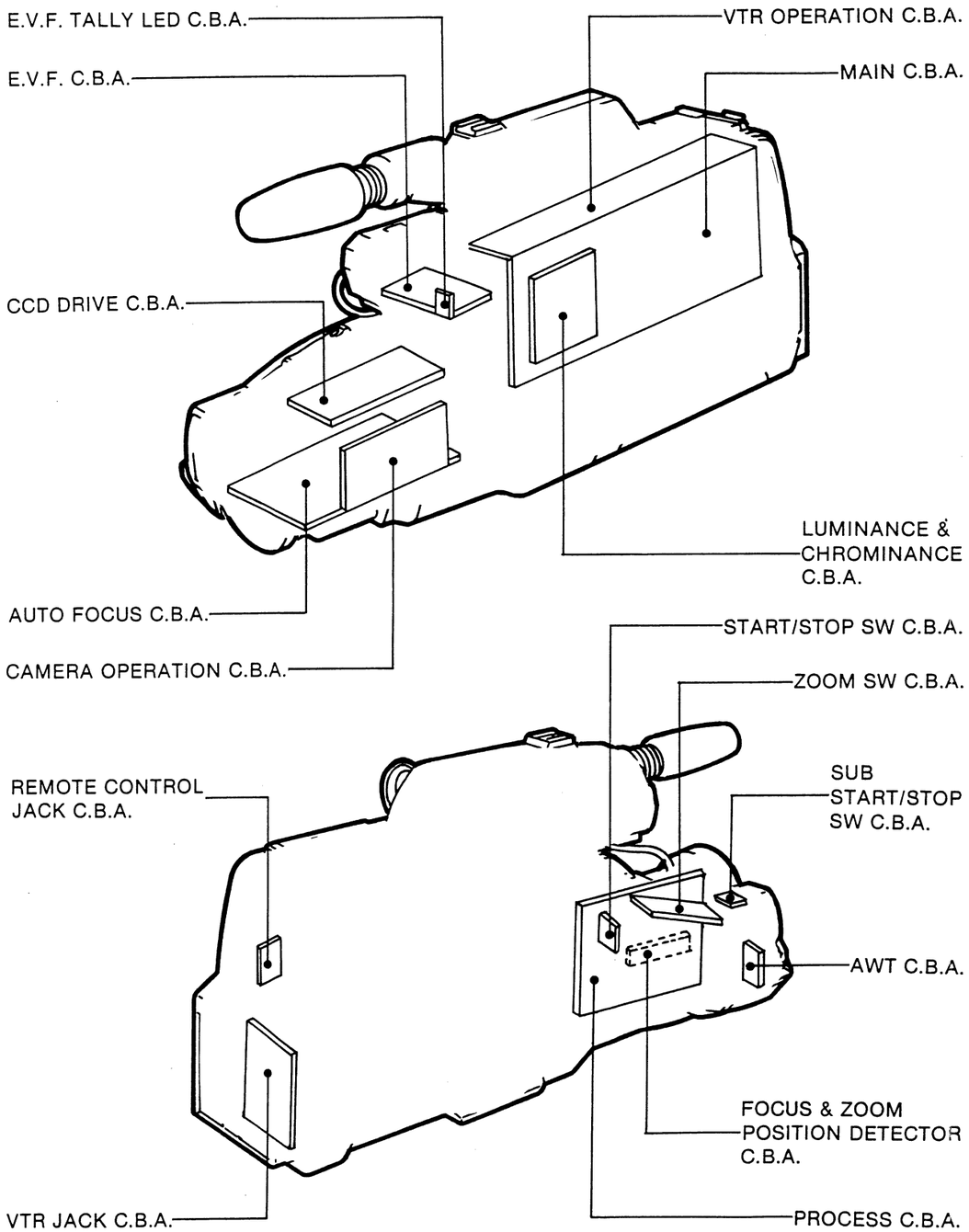

3-30. CAMERA INTERCONNECTION SCHEMATIC DIAGRAM

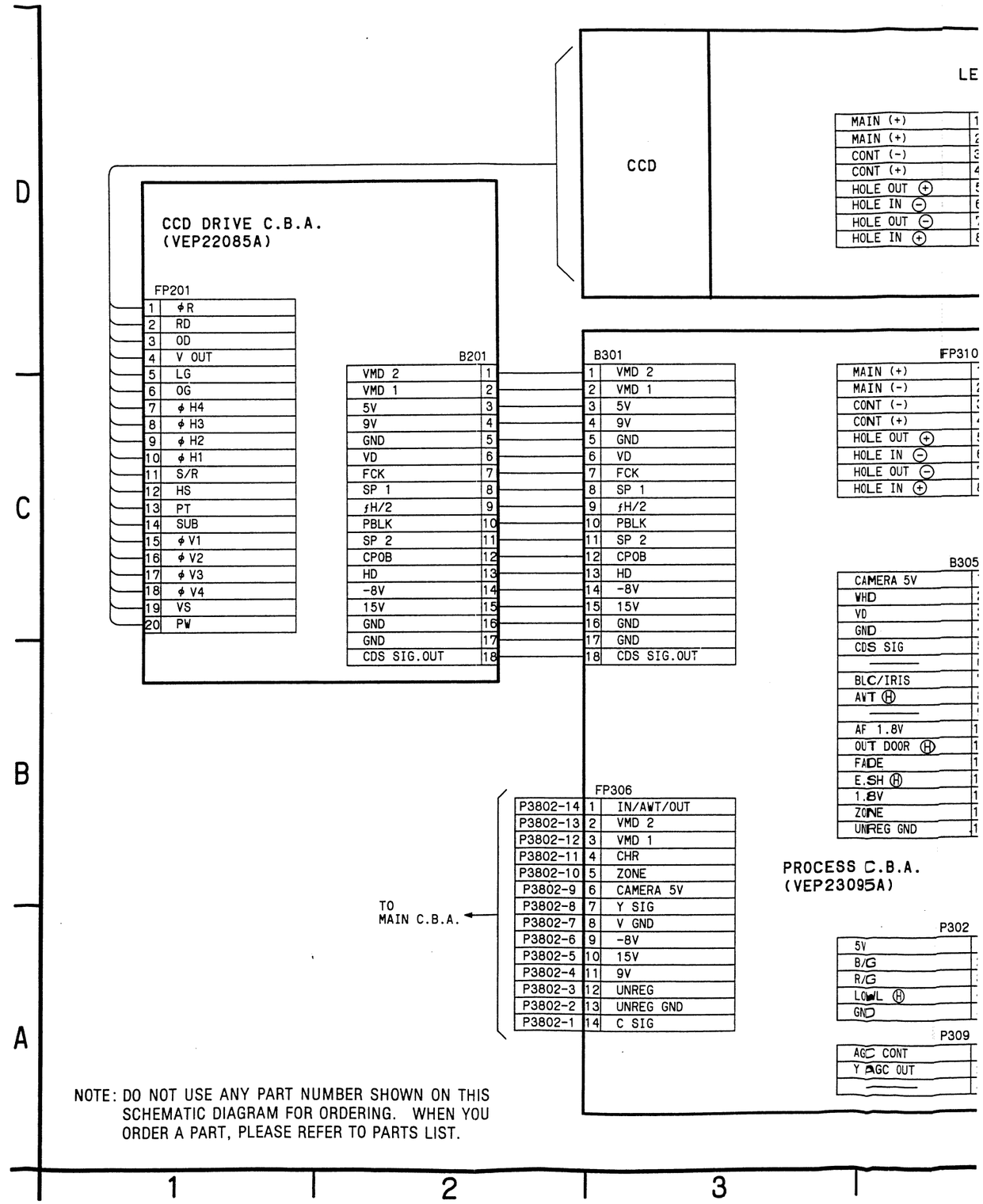

NOTE: DO NOT USE ANY PART NUMBER SHOWN ON THIS SCHEMATIC DIAGRAM FOR ORDERING. WHEN YOU ORDER A PART, PLEASE REFER TO PARTS LIST.

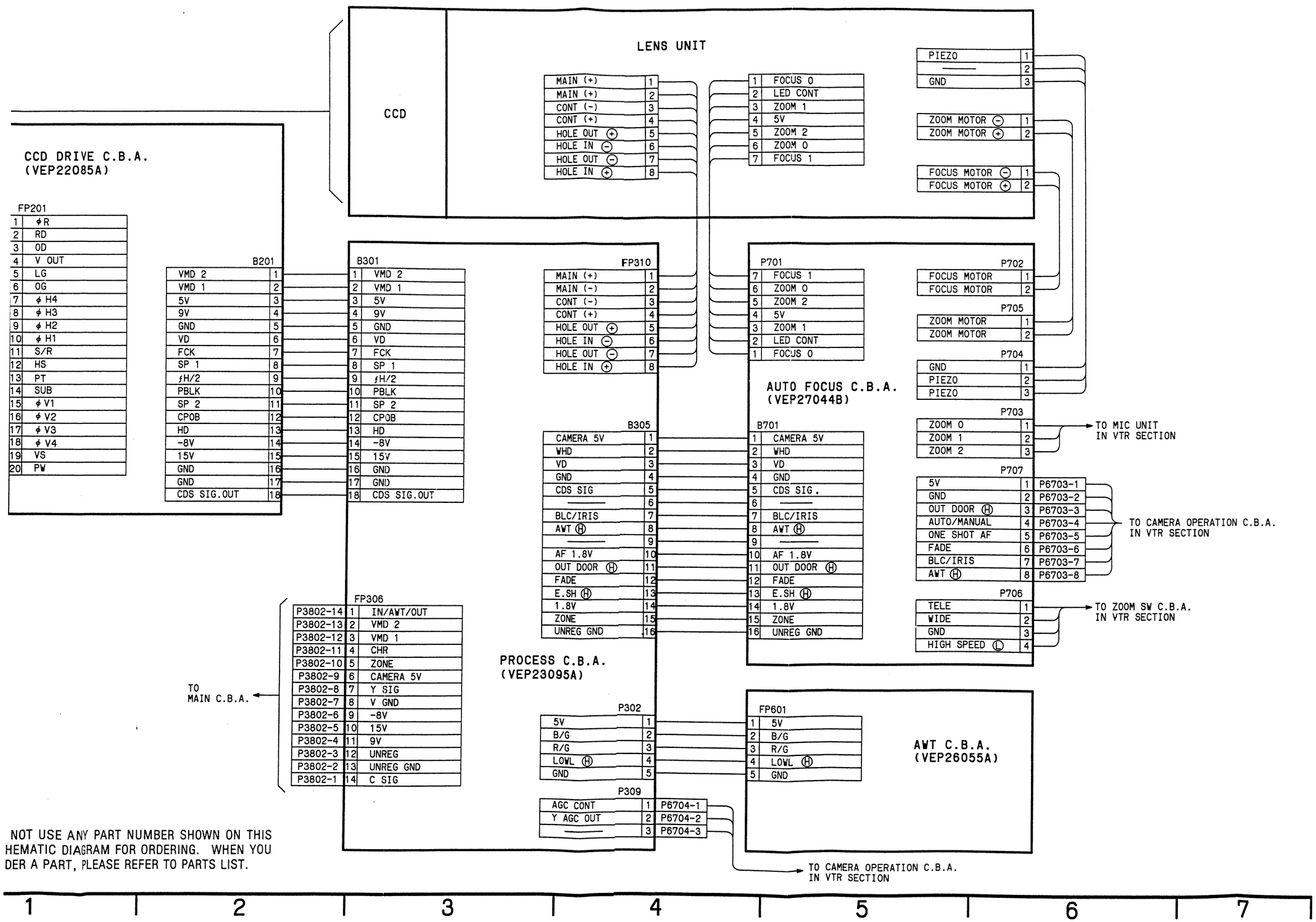

NOT USE ANY PART NUMBER SHOWN ON THIS
HEMATIC DIAGRAM FOR ORDERING. WHEN YOU
DER A PART, PLEASE REFER TO PARTS LIST.

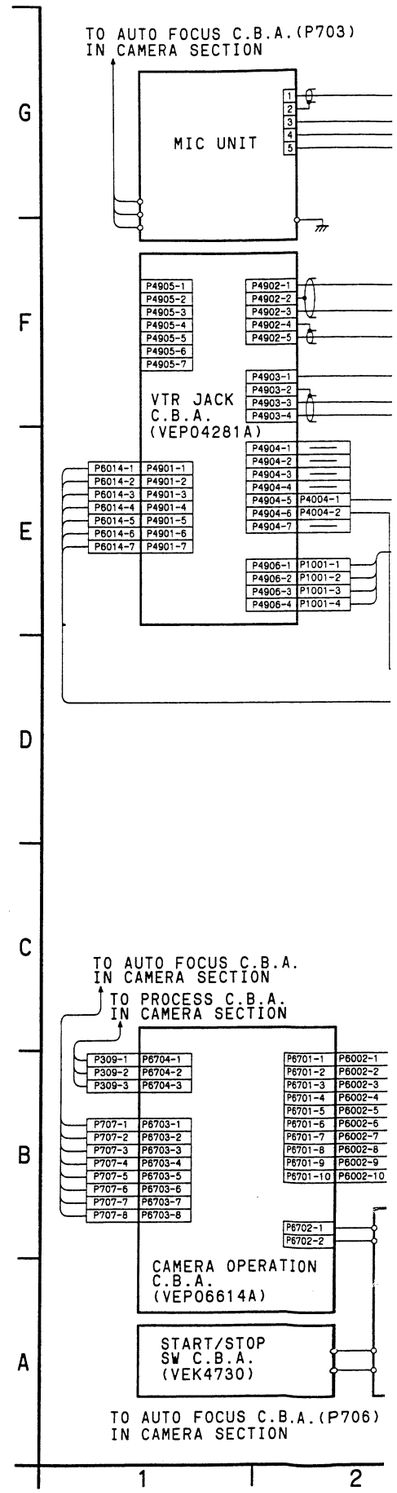

3-31. VTR INTERCONNECTION SCHEMATIC DIAGRAM

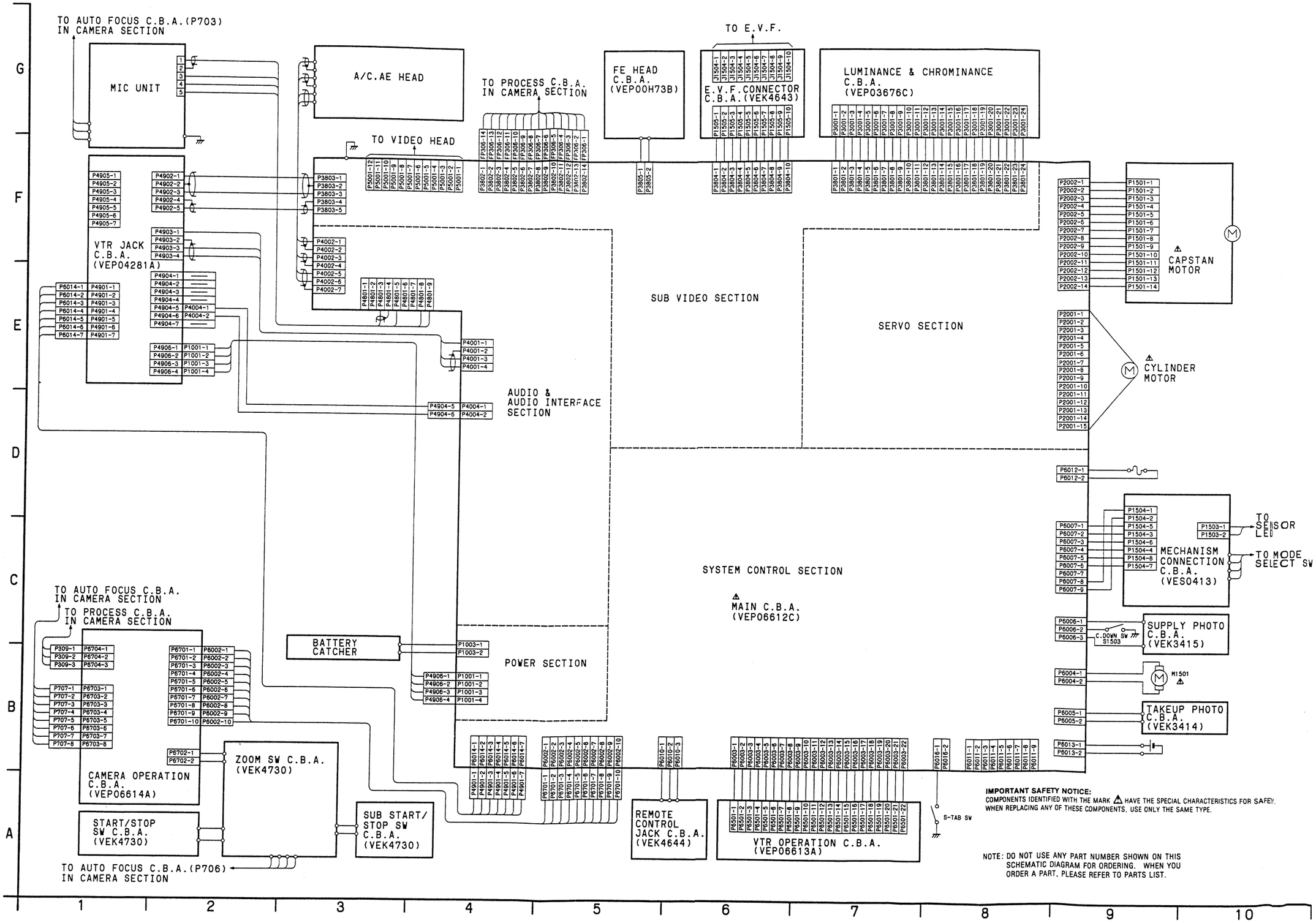

IMPORTANT SAFETY NOTICE:
COMPONENTS IDENTIFIED WITH THE MARK ⚠ HAVE THE SPECIAL CHARACTERISTICS FOR SAFETY. WHEN REPLACING ANY OF THESE COMPONENTS, USE ONLY THE SAME TYPE.

NOTE: DO NOT USE ANY PART NUMBER SHOWN ON THIS SCHEMATIC DIAGRAM FOR ORDERING. WHEN YOU ORDER A PART, PLEASE REFER TO PARTS LIST.

Next Page:
ICs & TRs INFORMATION Section

3-32. ICs & TRs INFORMATION

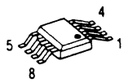

AN1358S
AN6562S
AN1358S
AN6914S
µPC1513G
NJM3415M
MST001MS
TL8809F
LM2964M
RC4558M

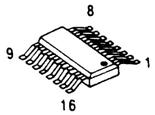

AN3580SB
MN3819S
MN3820S
µPD4094BG
AN2012S
RZ4052BM
AN6664S
MN4053BS

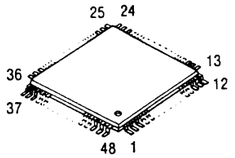

AN2154FAP
AN2254FAP
AN2584NFAP
AN3346FBP

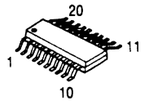

MN3107CS
µPD6145G617A

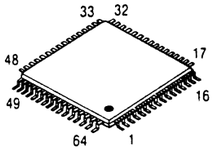

MN15867VFK

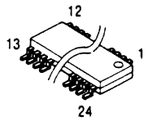

AN2510S
AN3841SR
µPC2300G

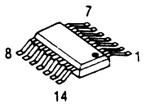

S3500A2
LM2902M

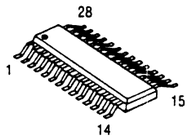

AN3798NS

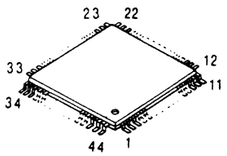

MN73912XWB
MN67461VDJF
MN73512XWA

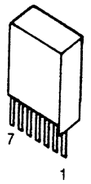

VCR0250

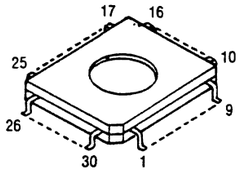

M51096AU

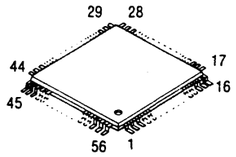

M52059AFP

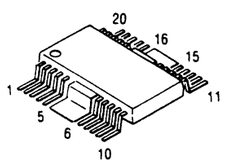

TA8402F

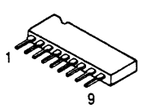

BA3308

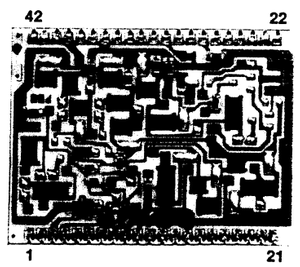

VEFH08D

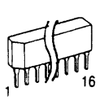

UN102

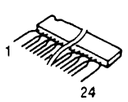

BA6149LS

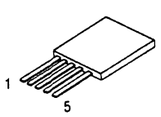

AN6545SP

Back Page:
INTERCONNECTION Section

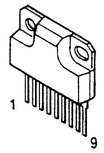

M54543AL

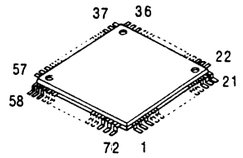

M50963

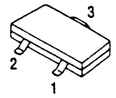

MN12821

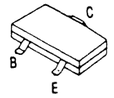

2SA1531 2SC3931
2SA812 2SC3938
2SA1255 2SC4176
2SA1532 2SD1328
2SA1610 2SD1483
2SB970 2SD1819
2SC3930 2SD1820
2SB1218 2SD601
2SB709 2SA1022
2SC3138
2SD602

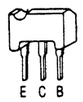

2SB641
2SD636
2SD1526
2SD2177S

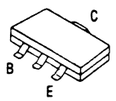

2SB956
2SD968A
2SD1119

2SA1175

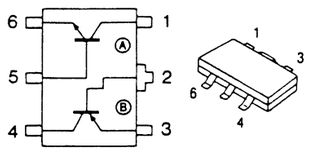

XN4601

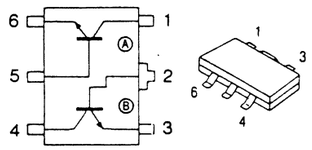

XN4501
XN4504

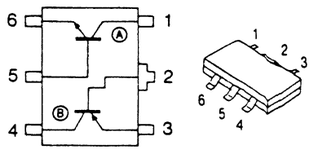

XN4608

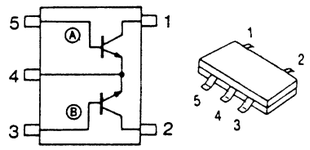

XN1501
FMW1

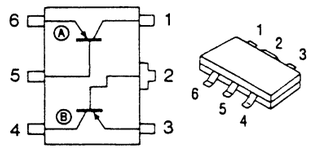

XN4401

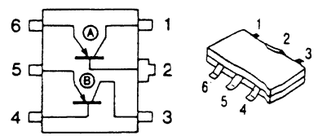

XN6401

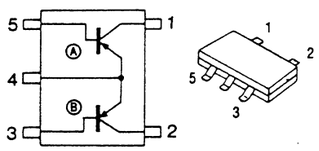

XN1401
FMS1

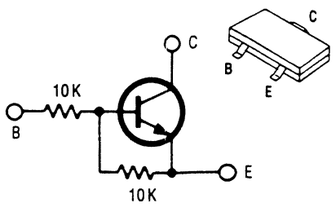

UN2211
DTA114EK
GA1A4M

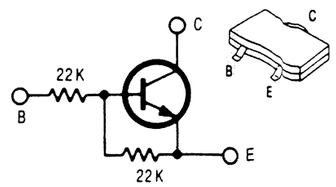

UN5212
GA1F4M

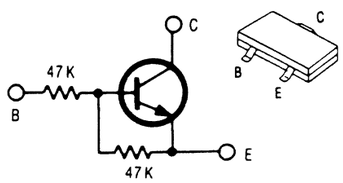

UN2213
UN5213
GA1L4M

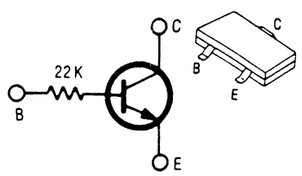

UN5217
GA1F4Z

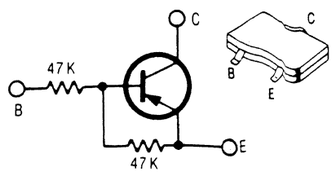

UN5113
GN1L4M

22
21

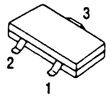

MN12821

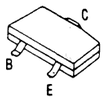

2SA1531 2SC3931
2SA812 2SC3938
2SA1255 2SC4176
2SA1532 2SD1328
2SA1610 2SD1483
2SB970 2SD1819
2SC3930 2SD1820
2SB1218 2SD601
2SB709 2SA1022
2SC3138
2SD602

2SA1175

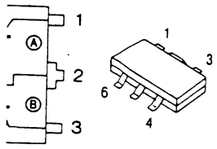

XN4501
XN4504

XN4608

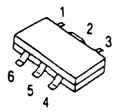

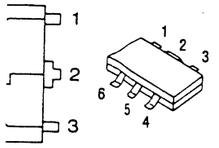

XN4401

XN6401

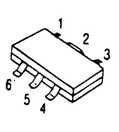

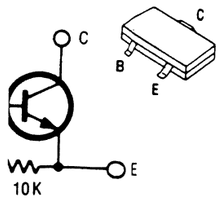

UN2211
DTA114EK
GA1A4M

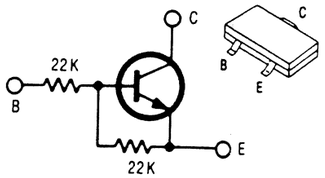

UN5212
GA1F4M

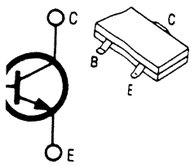

UN5217
GA1F4Z

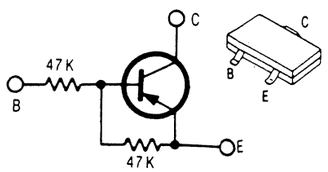

UN5113
GN1L4M

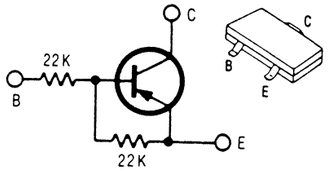

UN5211
GN1F4M

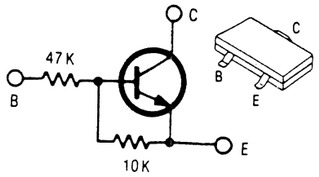

UN521E
GA1L4L

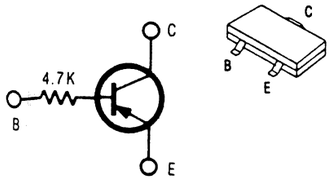

UN5116
GN1L3Z

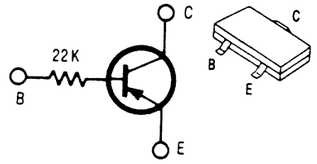

UN5117
GN1F4Z

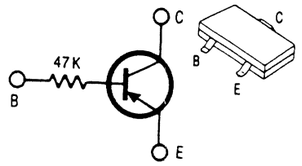

UN5110
GN1L4Z

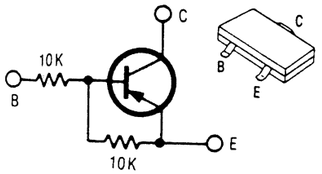

UN5111
GN1A4M

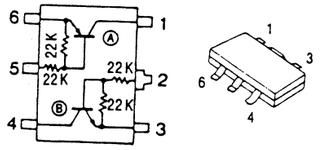

IMD2

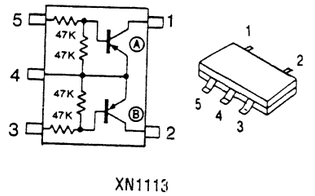

XN1113
FMA2

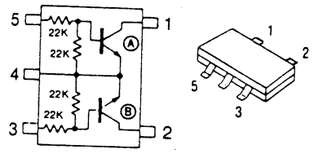

XN1212
FMG1

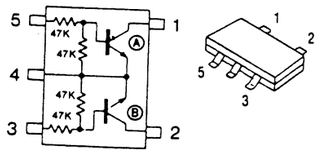

XN1213
FMG2

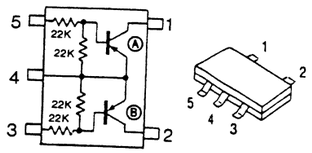

XN1112
FMA1

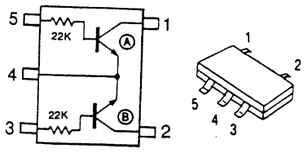

XN1217

SECTION 4
EXPLODED VIEWS & PARTS LIST

4-1. EXPLODED VIEWS ❶ CAMERA LENS SECTION

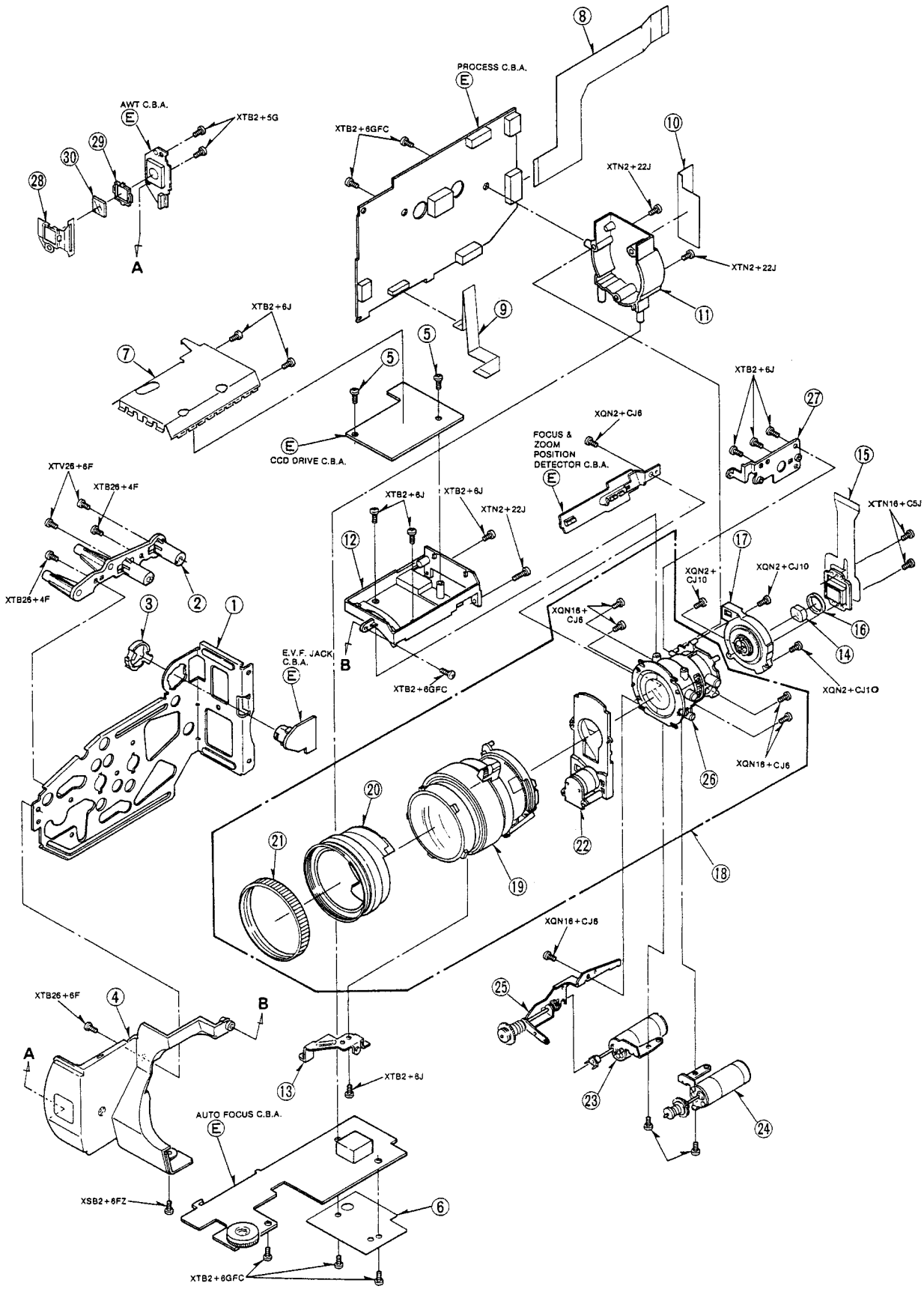

❷ MECHANISM SECTION (1)

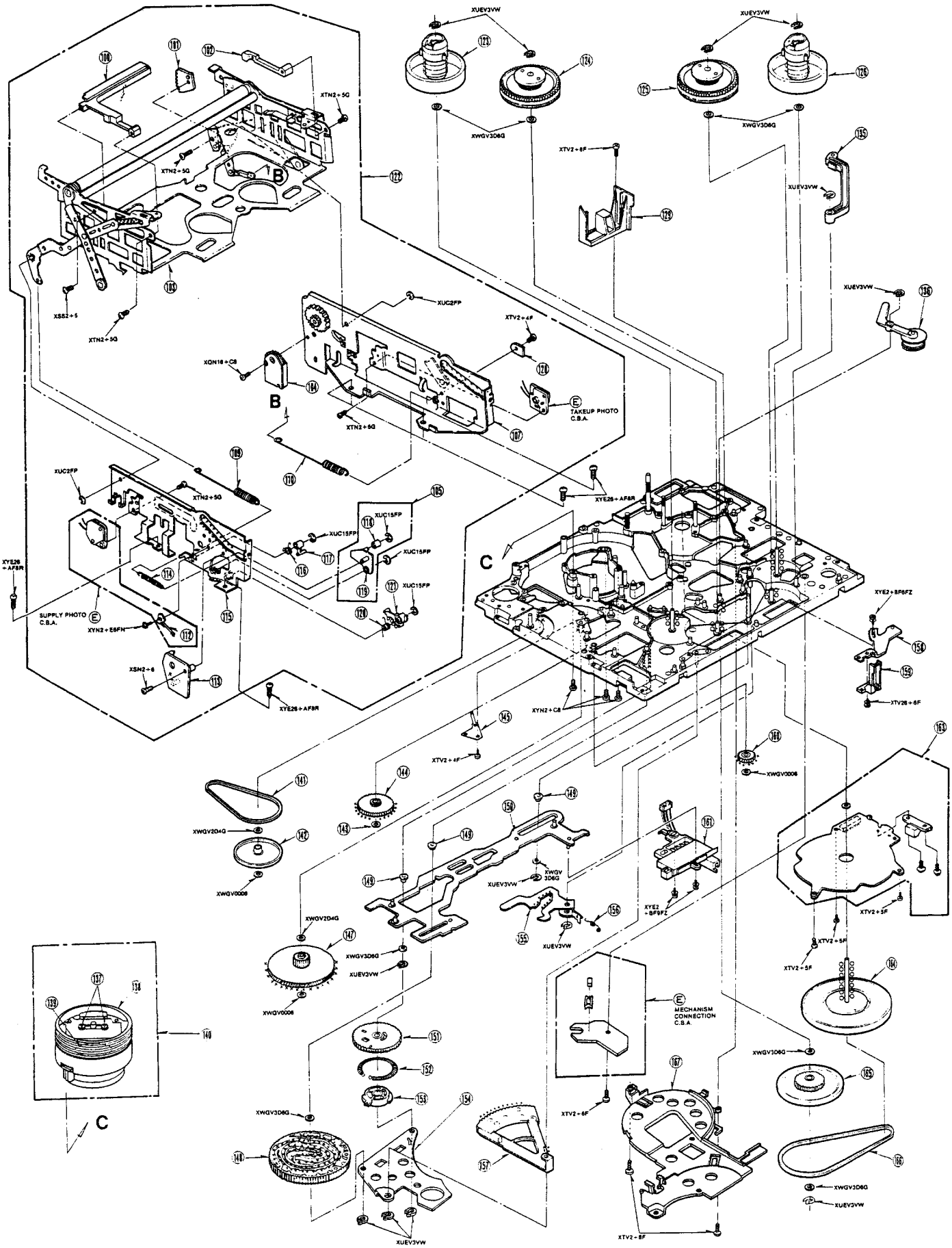

❸ MECHANISM SECTION (2)

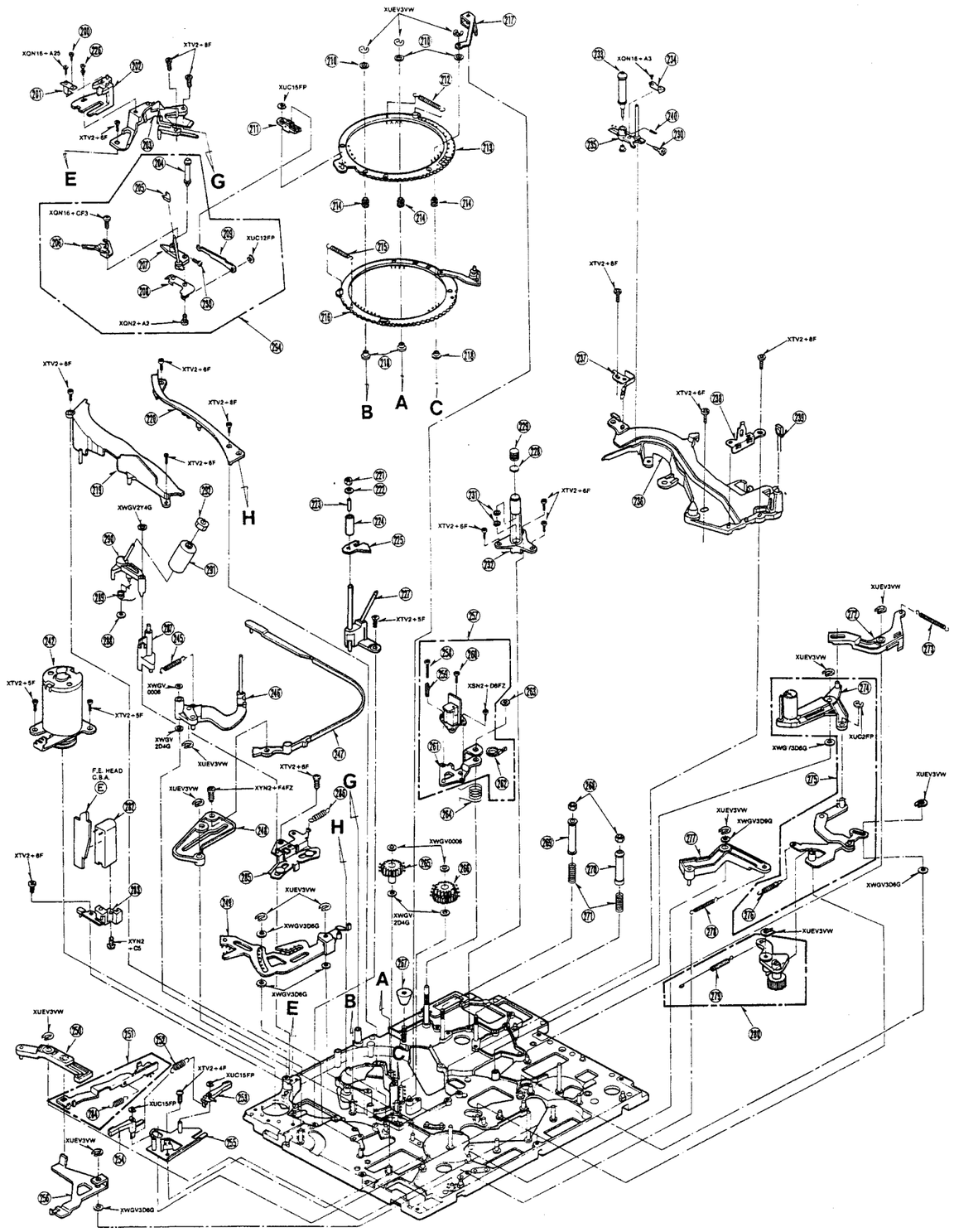

❹ CHASSIS & FRAME SECTION

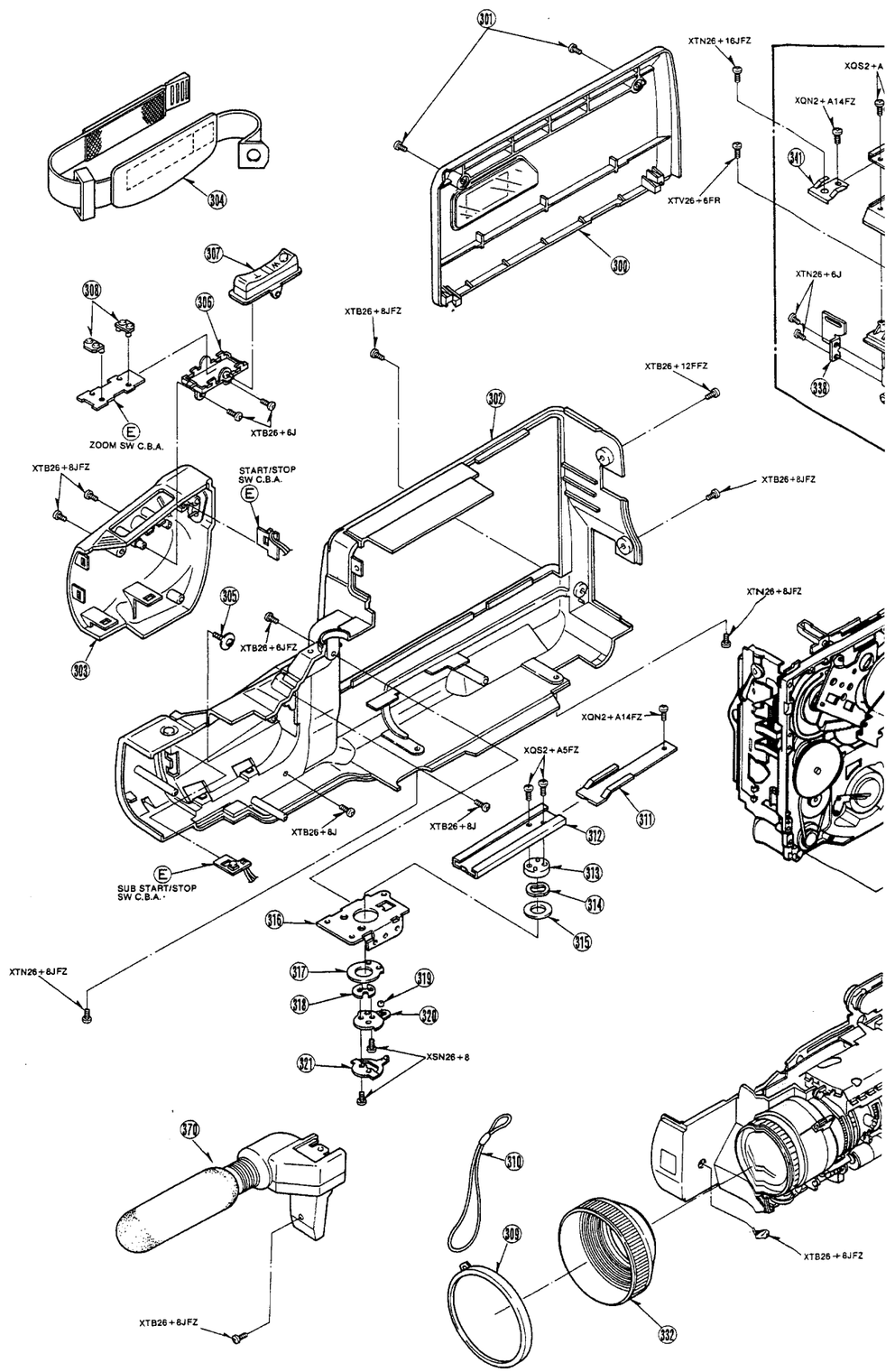

❹ CHASSIS & FRAME SECTION

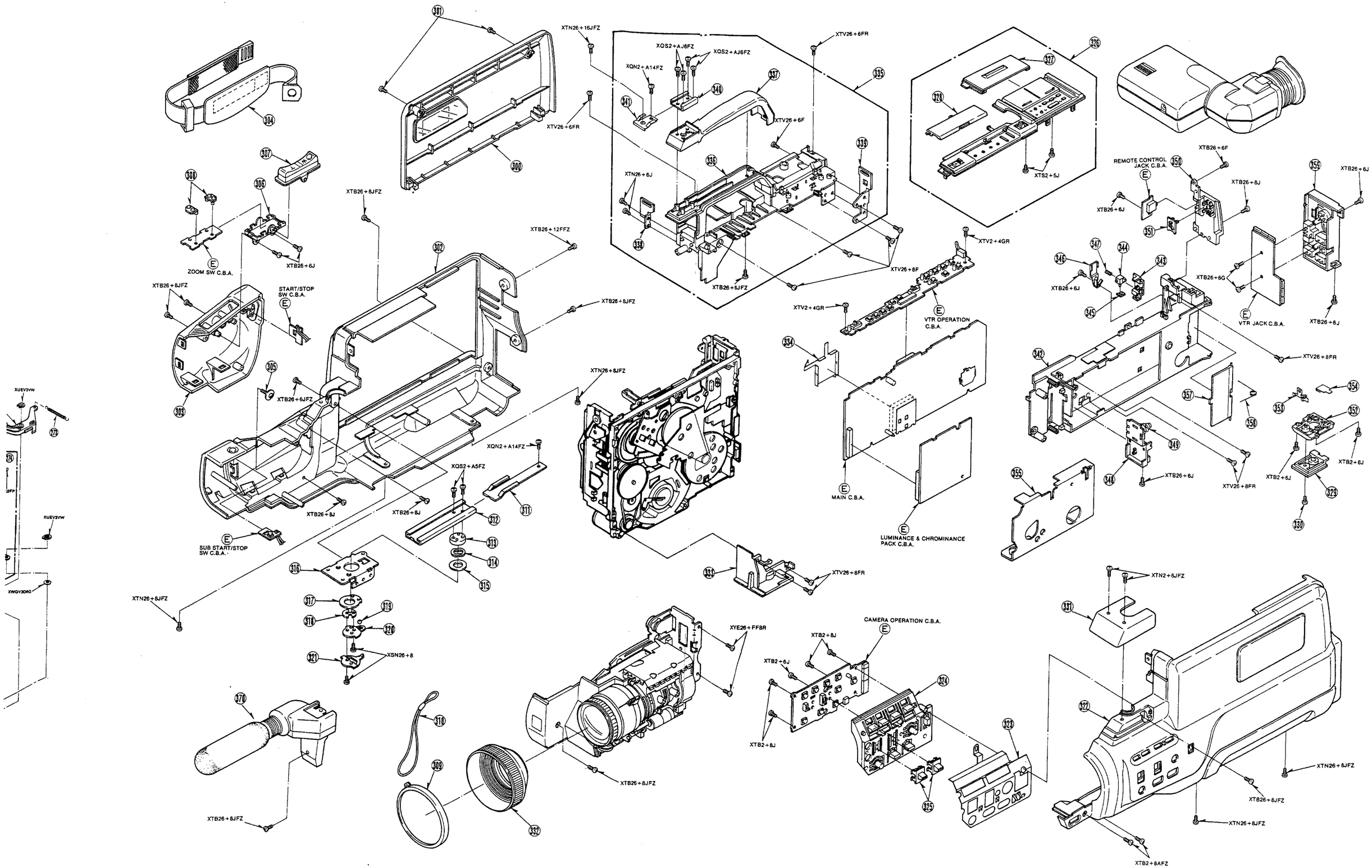

❺ E.V.F. SECTION

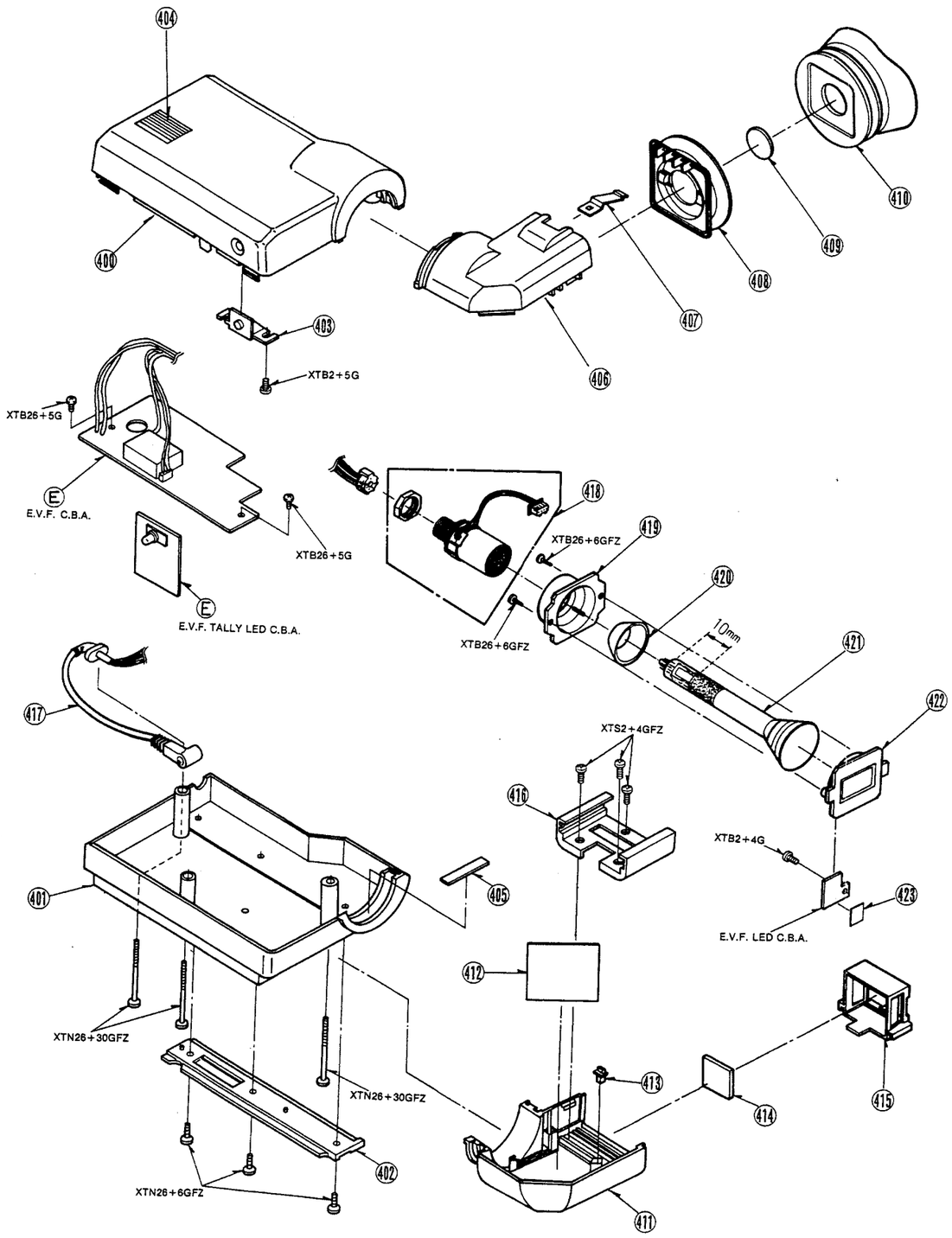

❻ PACKING PARTS & ACCESSORIES SECTION (NV-M1000EM)

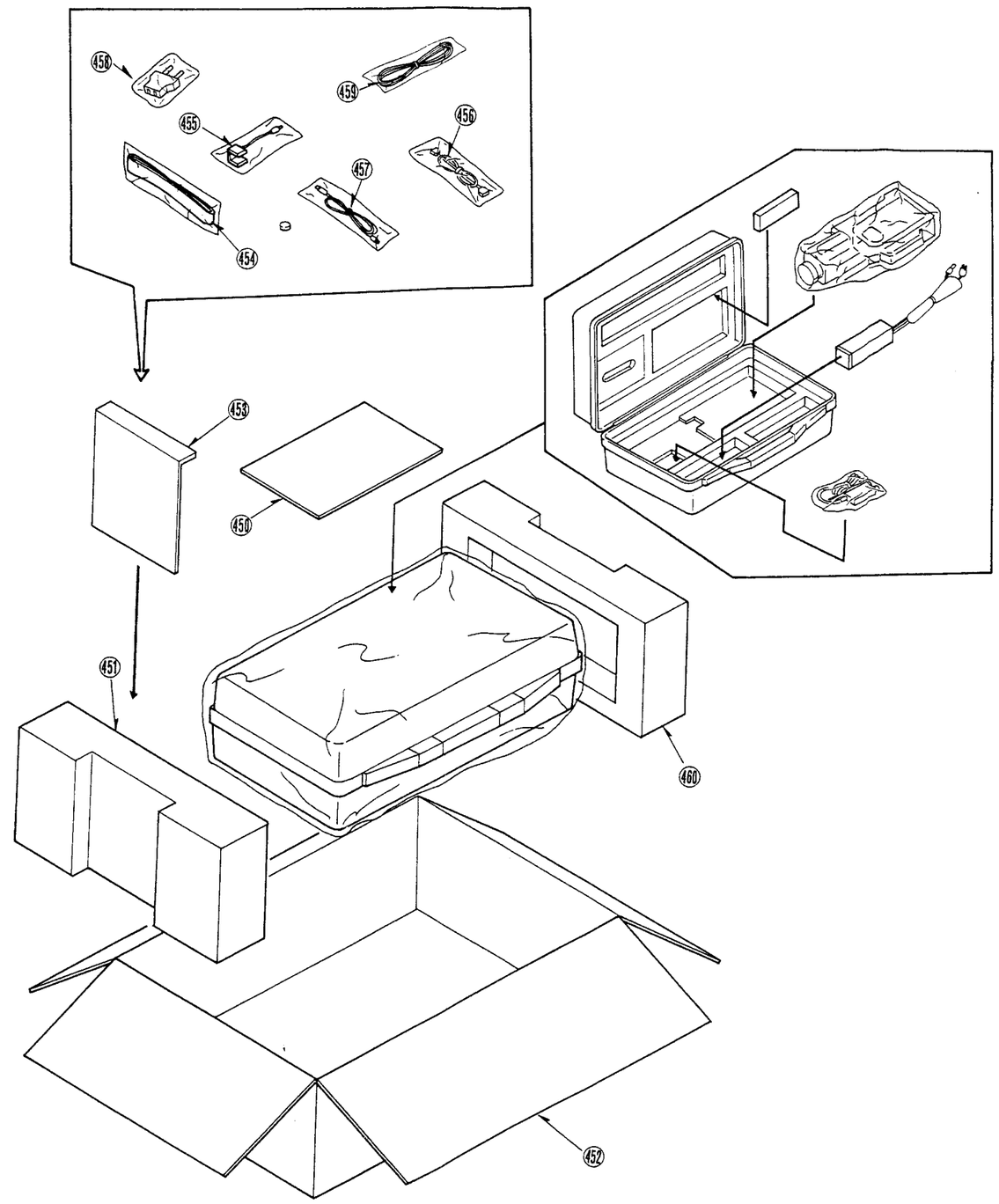

❻ PACKING PARTS & ACCESSORIES SECTION (NV-M1000EM)

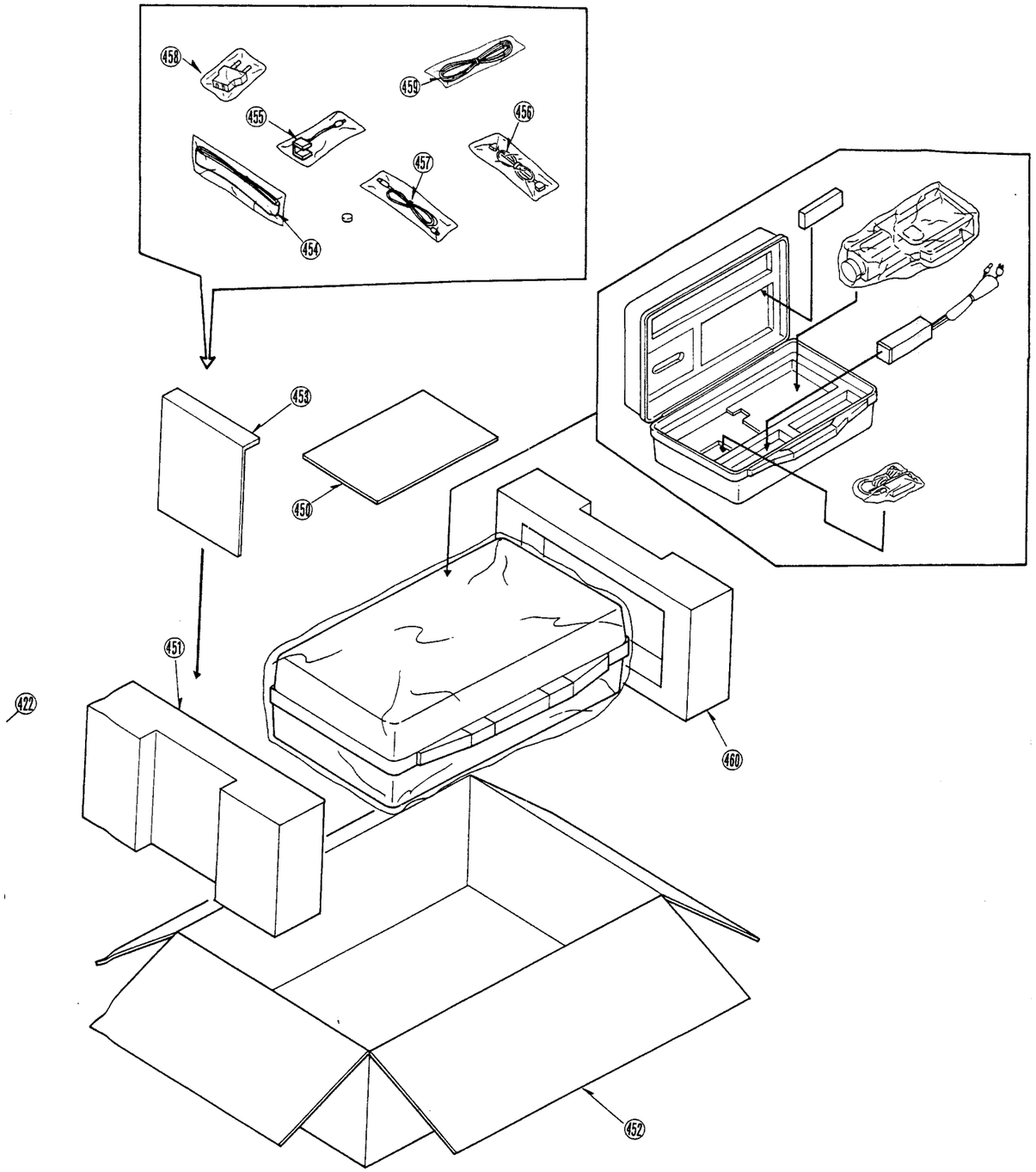

❼ PACKING PARTS & ACCESSORIES SECTION (NV-M1000EN)

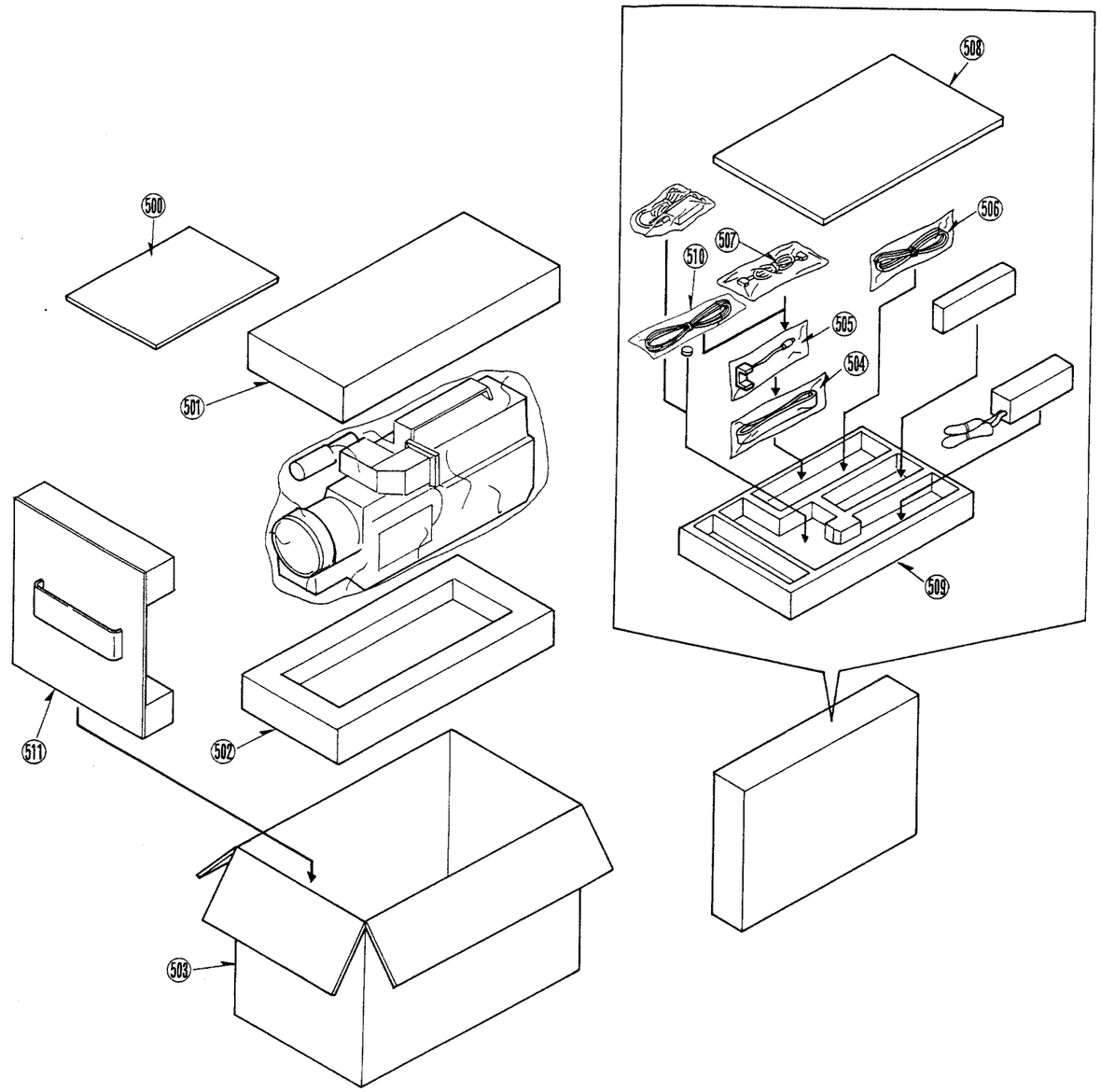

4-2. MECHANICAL REPLACEMENT PARTS LIST

Note: 1. * Be sure to make your orders of replacement parts according to this list.
2. IMPORTANT SAFETY NOTICE
Components identified with the mark <!> have the special characteristics for safety. When replacing any of these components, use only the same type.

Ref.No.		Part No.	Part Name & Description	Pcs	Remarks
1(1)		VMP2536	CAMERA ANGLE	1	
2(1)		VGQ1985	CAMERA ANGLE BOSS	1	
3(1)		VGQ1986	E.V.F. JACK PIECE	1	
4(1)		VYK2931	AWT CASE UNIT	1	
5(1)		VHD0398	CCD DRIVE FIXING SCREW	2	
6(1)		VMZ1549	AUTO FOCUS BARRIER	1	
7(1)		VSC3062	CCD DRIVE FRAME SHIELD	1	
			BARRIER		
8(1)		VWJ0410	PROCESS FLEXIBLE CORD	1	
9(1)		VWJ0412	IRIS FLEXIBLE CORD	1	
10(1)		VSC3109	SHIELD BARRIER	1	
11(1)		VJF0786	CCD DRIVE FRAME	1	
12(1)		VMD1438	CCD DRIVE C.B.A. FRAME	1	
13(1)		VMP2535	LENS ANGLE B	1	
14(1)		VDL0143	CRYSTAL FILTER	1	
15(1)		VEK4724	CCD UNIT	1	
16(1)		VMX1276	CCD CUSHION	1	
17(1)		VXQ0017	ACTUATER UNIT	1	
18(1)		VXW0064	LENS UNIT	1	
19(1)		VXW0066	LENS (1) UNIT	1	
20(1)		VDW0104	FOCUS RING	1	
21(1)		VDW0106	FOCUS RING RUBBER	1	
22(1)		VXL1954	IRIS UNIT	1	
23(1)		VEM0342	FOCUS MOTOR UNIT	1	
24(1)		VEM0343	ZOOM MOTOR UNIT	1	
25(1)		VXA3887	FOCUS DRIVE UNIT	1	
26(1)		VXQ0126	MASTER FLANGE UNIT	1	
27(1)		VMP2534	LENS ANGLE A	1	
28(1)		VMP1810	IR FIXING SPRING	1	
29(1)		VGQ1660	IR SPACER	1	
30(1)		VDL0170	IR FILTER	1	
100(2)		VMD0954	CASSETTE GUIDE (L)	1	
101(2)		VDG0610	MAIN ARM GEAR (A)	1	
102(2)		VMD0953	CASSETTE GUIDE (R)	1	
103(2)		VXA3865	CASSETTE HOLDER UNIT	1	
104(2)		VXP1139	DAMPER UNIT	1	
105(2)		VXL1984	LOCK LEVER UNIT	1	
107(2)		VXA3863	STAND (R) UNIT	1	
109(2)		VMB1329	HOLDER SPRING (L)	1	
110(2)		VMB1621	HOLDER SPRING (R)	1	
112(2)		VSH0026	LEAF SW	1	
113(2)		VMD0952	LEAF SW COVER (O)	1	
114(2)		VMB1330	LOCK BOARD SPRING	1	
115(2)		VXA3023	STAND (L) UNIT	1	
116(2)		VMB1453	LOCK LEVER (B) SPRING	1	
117(2)		VML1650	LOCK LEVER (B)	1	
118(2)		VDP1096	LOCK ROLLER (O)	1	
119(2)		VXL1648	LOCK BOARD UNIT	1	
120(2)		VMB1331	LOCK LEVER (A) SPRING	1	
121(2)		VML1649	LOCK LEVER (A)	1	
122(2)		VXA3867	CASSETTE UP (O) UNIT	1	
123(2)		VXR0128	SUPPLY REEL TABLE	1	
124(2)		VXP0900	SUPPLY CLUTCH UNIT	1	
125(2)		VXP0901	TAKE-UP CLUTCH UNIT	1	
126(2)		VXR0171	TAKE-UP REEL TABLE	1	
128(2)		VSQ0493	DEW DETECTOR UNIT	1	
129(2)		VGQ0888	CASSETTE OPENER	1	
135(2)		VXZ0246	SOFT BRAKE (T) UNIT	1	
136(2)		VXP0899	DRIVE GEAR ARM UNIT	1	
137(2)		VHD0288	CYLINDER UNIT SCREW	2	
138(2)		VEH0366	UPPER CYLINDER UNIT	1	
139(2)		VJR0347	RT TERMINAL	1	<!>
140(2)		VEG0777	CYLINDER UNIT	1	<!>
141(2)		VDV0167	LOADING BELT	1	
142(2)		VDG0370	INTERMEDIATE PULLEY GEAR	1	

Ref.No.		Part No.	Part Name & Description	Pcs	Remarks
143(2)		VMX0653	CUT WASHER	1	
144(2)		VDG0372	DRIVE GEAR (B)	1	
145(2)		VXS0076	EARTH HOLDER UNIT	1	
147(2)		VDG0371	DRIVE GEAR (A)	1	
148(2)		VDG0202	CAM GEAR	1	
149(2)		VMX0388	THRUST WASHER	3	
150(2)		VXL1654	MAIN ROD (K) UNIT	1	
151(2)		VDG0211	LOADING GEAR (C) (2)	1	
152(2)		VMB1324	LOADING GEAR (C) SPRING	1	
153(2)		VDG0210	LOADING GEAR (C) (1)	1	
154(2)		VMA7228	GUARD PLATE	1	
155(2)		VML1707	DRIVE ARMKICK LEVER	1	
156(2)		VMB1388	DRIVE ARMKICK LEVER SPRING	1	
157(2)		VXP0632	SECTOR GEAR UNIT	1	
158(2)		VMA6560	SAFETY TAB SW BASE	1	
159(2)		VSH0023	SAFETY TAB SW	1	
160(2)		VDG0207	DRIVE GEAR (C)	1	
161(2)		VSS0193	MODE SELECT SW	1	
163(2)		VEK3398	STATOR UNIT	1	
164(2)		VXP0634	ROTOR UNIT	1	
165(2)		VXP0897	MAIN PULLEY UNIT	1	
166(2)		VDV0155	CAPSTAN BELT	1	
167(2)		VMD0935	BELT COVER	1	
200(3)		VHD0282	P2 ADJUST PLATE SCREW	1	
201(3)		VMA6542	P2 ADJUST PLATE	1	
202(3)		VMD0701	SUPPLY POST STOPPER	1	
203(3)		VMD1166	V STOPPER BASE	1	
204(3)		VXP0841	SUPPLY ROLLER POST UNIT	1	
205(3)		VGQ0842	P2 CAP	1	
206(3)		VMD0769	TAPE PROTECTOR	1	
207(3)		VXA2221	SUPPLY SHAFT HOLDER(1)UNIT	1	
208(3)		VXA2256	SUPPLY SHAFT HOLDER ANGLE	1	
			UNIT	1	
209(3)		VMM0144	CONNECTION ROD	1	
210(3)		VMX1282	RING GUIDE SLEEVE UNIT	3	
211(3)		VXA2231	CONNECTION TIE UNIT	1	
212(3)		VMB1319	LOADING SPRING	1	
213(3)		VXA2253	LOADING RING (S) (1) UNIT	1	
214(3)		VDP1160	RING GUIDE ROLLER	3	
215(3)		VMB1319	LOADING SPRING	1	
216(3)		VXA3576	LOADING RING (T) (1) UNIT	1	
217(3)		VMC0250	PRESSER SPRING	1	
218(3)		VMX1279	RING GUIDE SLEEVE	3	
219(3)		VMD1155	LOADING GUIDE (S) (1)	1	
220(3)		VMD1128	LOADING GUIDE (S) (2)	1	
221(3)		VMX1088	SUPPLY UPPER LIMITER	1	
222(3)		VMS2888	P1 POST SLEEVE (B)	1	
223(3)		VMX1581	P1 COLLAR	1	
224(3)		VDP1265	P1 ROLLER	1	
225(3)		VMA6547	P1 LIMITER PLATE	1	
226(3)		VHD0403	SCREW	1	
227(3)		VXA3112	P1 BASE (1) UNIT	1	
228(3)		VXD0098	THRUST SPACER	1	
229(3)		VHD0204	THRUST SCREW NUT	1	
230(3)		VHD0368	ROLLER POST SCREW	2	
231(3)		VMX0775	DUST SEAL	2	
232(3)		VXD0108	CAPSTAN HOUSING UNIT	1	
233(3)		VXP0927	TAKE-UP ROLLER POST UNIT	1	
234(3)		VMA6546	TAKE-UP SHAFT HOLDER ANGLE	1	
235(3)		VXA3116	TAKE-UP SHAFT HOLDER (A)	1	
			UNIT		
236(3)		VMD1165	TAKE-UP LOADING BASE	1	
237(3)		VMC0352	SHAFT HOLDER PRESSURE	1	
			SPRING		
238(3)		VMA7226	SHAFT HOLDER PLATE ANGLE	1	
239(3)		LN59NV	LED	1	
240(3)		VHD0367	TAKE-UP SHAFT ADJ. SCREW	1	
242(3)		VEM0288	LOADING MOTOR UNIT	1	<!>
245(3)		VMB1747	TENSION SPRING	1	
246(3)		VXL1262	TENSION ARM UNIT	1	
247(3)		VXZ0245	TENSION BAND UNIT	1	
248(3)		VML2065	BAND RELEASE ARM	1	
249(3)		VML1631	TENSION KICK LEVER	1	
250(3)		VML2064	EJECT LEVER (A)	1	
251(3)		VXA3020	SUPPORTER UNIT	1	

Ref.No.		Part No.	Part Name & Description	Pcs	Remarks
252(3)		VMB1405	BRAKE SPRING	1	
253(3)		VXZ0207	BRAKE (R) UNIT	1	
254(3)		VXZ0206	BRAKE (L) UNIT	1	
255(3)		VXA2392	BRAKE PLATE (1) UNIT	1	
256(3)		VML2073	EJECT LEVER (B)	1	
257(3)		VED0131	A/C HEAD UNIT	1	
258(3)		VHD0275	A/C HEAD ADJUST SCREW	1	
259(3)		VMB1321	A/C HEAD ADJUST SPRING	1	
260(3)		VHD0381	A/C HEAD TILT ADJUST SCREW	1	
261(3)		VXL1696	A/C HEAD ARM UNIT	1	
262(3)		VJF0760	A/C HEAD BINDER	1	
263(3)		VHN0077	A/C HEAD ARM NUT	1	
264(3)		VMB1320	A/C HEAD SPRING	1	
265(3)		VDG0208	LOADING GEAR (A)	1	
266(3)		VDG0461	LOADING GEAR (B)	1	
267(3)		VHN0072	ADJUST NUT	1	
268(3)		VHN0047	M2 NYLON NUT	2	
269(3)		VMS2693	P4 POST SLEEVE	1	
270(3)		VXJ0057	P5 POST SLEEVE	1	
271(3)		VMB1322	P4,P5 SPRING	2	
272(3)		VML2067	PINCH LEVER	1	
273(3)		VMB2071	PINCH LEVER SPRING	1	
274(3)		VXL1652	PINCH ROLLER ARM (1) UNIT	1	
275(3)		VXL1650	PINCH ARM UNIT	1	
276(3)		VMB1326	PINCH ARM SPRING	1	
277(3)		VXL1264	SOFT BRAKE LEVER (S) UNIT	1	
278(3)		VMB1314	SOFT BRAKE SPRING (S)	1	
279(3)		VMB1771	REW ARM SPRING	1	
280(3)		VXL1649	FF/REW ARM UNIT	1	
282(3)		VBS0021	FE HEAD	1	
283(3)		VMD1129	FE HEAD BASE	1	
284(3)		VMB1447	SUPPORTER SPRING	1	
285(3)		VXA3579	SLIDE BASE (O) UNIT	1	
286(3)		VMB1965	SLIDE SPRING	1	
287(3)		VML2285	IMPEDANCE LEVER	1	
288(3)		VHN0109	PUSH NUT	1	
289(3)		VMB1964	IMPEDANCE DRIVE SPRING	1	
290(3)		VXL1879	IMPEDANCE ARM (1) UNIT	1	
291(3)		VDP1285	IMPEDANCE ROLLER	1	
292(3)		VMX1088	SUPPLY UPPER LIMITER	1	
294(3)		VXA2220	SUPPLY SHAFT HOLDER UNIT	1	
300(4)		VYP2991	CASSETTE COVER UNIT	1	
301(4)		VHD0371	CASSETTE COVER SCREW	2	
302(4)		VYK3073	SIDE CASE (L) 1 UNIT	1	
303(4)		VYK3074	GRIP CASE 1 UNIT	1	
304(4)		VYC0387	GRIP BELT UNIT	1	
305(4)		VHD0386	GRIP BELT SCREW	1	
306(4)		VGQ1790	ZOOM BUTTON PIECE	1	
307(4)		VGU5007	ZOOM BUTTON	1	
308(4)		VMG0462	SWITCH RUBBER PIECE	2	
309(4)		VKF0950	HOOD CAP	1	
310(4)		VGQ1350	HOOD STRAP	1	
311(4)		VMC0257	E.V.F. SHOE SPRING	1	
312(4)		VMP1073	E.V.F. SHOE	1	
313(4)		VMP1072	E.V.F. ROTATION STAND	1	
314(4)		WW-12	WAVING WASHER	1	
315(4)		VMX1123	E.V.F. ROTATION SPACER	1	
316(4)		VMP2532	E.V.F. ANGLE	1	
317(4)		VGQ1213	E.V.F. ROTATION PIECE (A)	1	
318(4)		VGQ1214	E.V.F. ROTATION PIECE (B)	1	
319(4)		VDB0876	E.V.F. CLICK BALL	1	
320(4)		VMC0576	E.V.F. CLICK SPRING (A)	1	
321(4)		VMC0609	E.V.F. CLICK SPRING (B)	1	
322(4)		VYK3144	SIDE CASE (R) 1 UNIT	1	
323(4)		VSC3023	CAMERA EARTH PLATE	1	
324(4)		VGP2433	CAMERA OPERATION PANEL	1	
325(4)		VGU5008	SLIDE KNOB	2	
326(4)		VXU0959	OPERATION PANEL UNIT	1	
327(4)		VKF1388	CURSOR	1	
328(4)		VKF1387	RESET/MEMORY LID	1	
329(4)		VKF1385	BATTERY LID	1	
330(4)		VHD0437	BATTERY LID SCREW	1	
331(4)		VKM2040	E.V.F. BASE CASE	1	
332(4)		VDW0073	LENS HOOD	1	
333(4)		VYQ0096	TRIPOD FIXING BRACKET UNIT	1	

Ref.No.		Part No.	Part Name & Description	Pcs	Remarks
334(4)		VSC3014	SHIELD CASE (LID)	1	
335(4)		VXK0965	TOP FRAME UNIT	1	
336(4)		VMD1471	TOP FRAME	1	
337(4)		VKM2041	HANDLE TOP COVER	1	
338(4)		VMP2533	SHOULDER BELT ANGLE (FRONT)	1	
339(4)		VMP2587	SHOULDER BELT ANGLE (REAR)	1	
340(4)		VMP1079	SHOE	1	
341(4)		VMC0575	SHOE SPRING	1	
342(4)		VYK3075	BATTERY CASE 1 UNIT	1	
343(4)		VGU3441	BATTERY EJECT BUTTON	1	
344(4)		VGQ1122	BATTERY LOCK PIECE	1	
345(4)		VGQ1181	BATTERY STOPPER PIECE	1	
346(4)		VMC0238	BATTERY STOPPER FIXING	1	
			ANGLE		
347(4)		VMB1610	BATTERY STOPPER SPRING	1	
348(4)		VGQ1129	BATTERY CATCHER	1	
349(4)		VMB1614	BATTERY EJECT SPRING	1	
350(4)		VYK3076	JACK PLATE 1 UNIT	1	
351(4)		VGU5009	JACK KNOB	1	
352(4)		VYK2503	BATTERY HOLDER UNIT	1	
353(4)		VJR0363	ELECTRODE (-)	1	
354(4)		VMC0326	ELECTRODE (+)	1	
355(4)		VGQ2027	BATTERY CASE COVER	1	
357(4)		VKF0831	BATTERY DOOR	1	
358(4)		VMC0237	BATTERY DOOR SPRING	1	
359(4)		VEJ0992	VTR JACK PLATE UNIT	1	
370(4)		VEK4736	MIC UNIT	1	
400(5)		VYK2993	E.V.F. TOP COVER UNIT	1	
401(5)		VKM1777	E.V.F. BOTTOM COVER	1	
402(5)		VGQ1826	E.V.F. HOOD	1	
403(5)		VGL0393	LED PANEL LIGHT	1	
404(5)		VGF0338	VOLUME CAP	1	
405(5)		VMC0489	E.V.F. ROTARION SPRING	1	
406(5)		VKM2140	CRT TOP CASE	1	
407(5)		VMC0316	EYE CAP HOLDER SPRING	1	
408(5)		VKF1255	EYE CAP HOLDER	1	
409(5)		VDL0140	EYE CAP LENS	1	
410(5)		VMG0411	EYE CAP	1	
411(5)		VKM2141	CRT BOTTOM COVER	1	
412(5)		VDL0141	MIRROR	1	
413(5)		VGU3895	EYESIGHT CORRECTION KNOB	1	
414(5)		VDL0139	EYESIGHT CORRECTION LENS	1	
415(5)		VKF0947	LENS HOLDER	1	
416(5)		VKF1278	LENS HOLDER GUIDE	1	
417(5)		VEK3604	E.V.F CABLE UNIT	1	
418(5)		ELY07V552A	DEFLECTION YOKE	1	
419(5)		VJF0501	CRT HOLDER	1	
420(5)		VMX1004	CRT PROTECTOR RUBBER	1	
421(5)		M02JVV48WB	CRT	1	
422(5)		VJF0729	CRT MASKING	1	
423(5)		VGL0416	LED SHEET	1	
450(6)		VQT3436	OPERATING INSTRUCTIONS	1	<!> NV-M1000EM
			(ENGLISH/ARABIC)		
450(6)		VQT3500	OPERATING INSTRUCTIONS	1	<!> NV-M1000EM
			(HINDI/URDU)		
451(6)		VPN2612	CUSHION	1	NV-M1000EM
452(6)		VPG5144	PACKING	1	NV-M1000EM
453(6)		VPK1174	ACCESSORY PAD	1	NV-M1000EM
454(6)		VFC0131	SHOULDER STRAP	1	NV-M1000EM
455(6)		VJA0180	BATTERY PACK CHARGING	1	NV-M1000EM
			CONNECTOR		
456(6)		VJA0573	3P DC INPUT CORD	1	NV-M1000EM
457(6)		VFA0039	AV OUTPUT CORD	1	NV-M1000EM
458(6)		VJSS0070	POWER PLUG ADAPTOR	1	NV-M1000EM
459(6)		VJA0376	RF CORD	1	NV-M1000EM
460(6)		VYQ0367	CUSHION UNIT	1	NV-M1000EM
500(7)		VQT3428	OPERATING INSTRUCTIONS	1	NV-M1000EN
			(ENGLISH/CHINESE)		
501(7)		VPN2614	CUSHION (UPPER)	1	NV-M1000EN
502(7)		VPN2615	CUSHION (LOWER)	1	NV-M1000EN
503(7)		VPG5143	PACKING	1	NV-M1000EN
504(7)		VFC0131	SHOULDER STRAP	1	NV-M1000EN
505(7)		VJA0180	RECHARGEABLE BATTERY	1	NV-M1000EN
			CATCHER		NV-M1000EN
506(7)		VFA0039	AUDIO/VIDEO CORD	1	NV-M1000EN

Ref.No.		Part No.	Part Name & Description	Pcs	Remarks
507(7)		VJA0573	3P DC JACK CORD	1	NV-M1000EN
508(7)		VPN2617	PAD	1	NV-M1000EN
509(7)		VPN2616	ACCESSORY BOX	1	NV-M1000EN
510(7)		VFA0376	RF CORD	1	NV-M1000EN
511(7)		VPN2689	HANDLE	1	NV-M1000EN
			FIXTURES & TOOLS		
		VFK0430	FLEXIBLE EXTENSION CABLE	1	
		VFK0380	EXTENTION CABLE	2	
		VFK0613	HOLDER SPACER (2PCS)	1	
		VFK0431	CAMERA HOLDER ARM	1	
		VFK0382	CAMERA HOLDER	1	
		VFJ8125H3F	VHS-ALLGNMENT TAPE (PAL)	1	
		VFK0144	RETAINING RING REMOVER	1	
			(3mm)		
		VFK0191	POST ADJUSTMENT PLATE	1	
		VFK0190	REEL TABLE HEIGHT GAUGE	1	
		VFK0189	H-POSITION ADJ. -FIXTURE	1	
		VFK0137	POST ADJUSTMENT SCREWDRIVER	1	
		VFK66	FAN TYPE TENSION GAUGE	1	
		VFK0326	HEX WRENCH SET	1	
		VFK0343	CHECK LIGHT	1	
		VFK27	HEAD CLEANING STICK	1	
		MOR265	MORLYTONE GREASE	1	
		VFK0283	SERVICE ALIGNMENT TOOL KIT	1	
		VFK0136	FINE ADJUSTMENT SCREWDRIVER	1	
		VFK0134	ADAPTOR FOR VFK0133	1	
		VFK0133	DIAL TORQUE GAUGE	1	

Ref.No.		Part No.	Part Name & Description	Pcs	Remarks

4-3. ELECTRICAL REPLACEMENT PARTS LIST

Note: 1. * Be sure to make your orders of replacement parts according to this list.
2. IMPORTANT SAFETY NOTICE
Components identified with the mark <!> have the special characteristics for safety. When replacing any of these components, use only the same type.
3. Unless otherwise specified,
All resistors are in OHMS, K=1,000 OHMS. All capacitors are in MICROFARADS(uf), P=uuF.
4. The P.C.Board units marked width'■'show below the main assembled parts.

Ref.No.		Part No.	Part Name & Description	Pcs	Remarks
			---- CAMERA SECTION ----		
		VEP26055A	AWT C.B.A.	1	(NLA)
		VEP22085A	CCD DRIVE C.B.A.	1	(NLA)
		VEP23095A	PROCESS C.B.A.	1	(NLA)
		VEP27044B	AUTO FOCUS C.B.A.	1	(NLA)
		VEP06614A	CAMERA OPERATION C.B.A.	1	(NLA)
		VEP00P37A	AF & ZOOM POSITION C.B.A.	1	(NLA)
			----- E.V.F. SECTION ------		
		VEP27033G	E.V.F. C.B.A.	1	(NLA)
		VEP27042A	E.V.F. LED C.B.A.	1	(NLA)
		VEP27043A	E.V.F. TALLEY LED C.B.A.	1	(NLA)
			------ VTR SECTION -------		
		VEP06612C	MAIN C.B.A.	1	(NLA)
		VEP03676C	LUMINANCE/CHROMINANCE C.B.A	1	(NLA)
		VEP06613A	VTR OPERATION C.B.A.	1	(NLA)
		VEP04281B	VTR JACK C.B.A.	1	(NLA)
		VEP00H73B	FE HEAD C.B.A.	1	(NLA)
		VEK4643	E.V.F. CONNECTOR C.B.A.	1	(NLA)
		VEK4644	REMOTE CONTROL JACK C.B.A.	1	(NLA)
		VEK4730	ZOOM SW, START/STOP SW, SUB START/STOP SW C.B.A.	1	(NLA)
		VES0413	MECHANISM CONNECTION C.B.A.	1	(NLA)
		VEK3414	TAKE-UP PHOTO C.B.A.	1	(NLA)

Ref.No.		Part No.	Part Name & Description	Pcs	Remarks
		VEK3415	SUPPLY PHOTO C.B.A.	1	(NLA)
	■	VEP26055A	AWT C.B.A.		(NLA)
			CAPACITORS		
C601-03		ECUM1E104ZFN	C.CAPACITOR CH 25V 0.1U	3	
			ICS		
IC601		M51096AU	IC	1	
IC602		AN1358S	IC	1	
			CONNECTOR		
P601		VJP1598T	CONNECTOR(MALE) 5P	1	
			RESISTORS		
R601		ERJ6GEYF123	M.RESISTOR CH 1/10W 12K	1	
R602		ERJ6GEYF822	M.RESISTOR CH 1/10W 8.2K	1	
R603		ERJ6GEYF124	M.RESISTOR CH 1/10W 120K	1	
R604		ERJ3GEYJ222	M.RESISTOR CH 3W 2.2K	1	
R605		ERJ3GEYJ102	M.RESISTOR CH 3W 1K	1	
R606,07		ERJ3GEYJ103	M.RESISTOR CH 3W 10K	2	
R608		ERJ3GEYJ102	M.RESISTOR CH 3W 1K	1	
R609		ERJ3GEYJ222	M.RESISTOR CH 3W 2.2K	1	
R610		ERJ3GEYJ103	M.RESISTOR CH 3W 10K	1	
	■	VEP22085A	CCD DRIVE C.B.A.		(NLA)
B201		VJP1948	CONNECTOR (MALE)	1	
			CAPACITORS		
C201		ECSF1AE106	T.CAPACITOR 10V 10U	1	
C202,03		ECUM1H150JCV	C.CAPACITOR CH 50V 15P	2	
C204		ECUM1H390JCV	C.CAPACITOR CH 50V 39P	1	
C206		ECRJA010A12X	.CAPACITOR V	1	
C207		ECSF1AE106	T.CAPACITOR 10V 10U	1	
C208		ECEV0JA220	E.CAPACITOR 6.3V 22U	1	
C209		ECSF1CE106	T.CAPACITOR 16V 10U	1	
C210		ECEV1HA010	E.CAPACITOR 50V 1U	1	
C211		ECUM1E104ZFM	C.CAPACITOR CH 25V 0.1U	1	
C212		ECEA1EKS100I	E.CAPACITOR 25V 10U	1	
C213		ECUM1E4732FN	C.CAPACITOR CH 25V 0.047U	1	
C214		ECEA1HKS010	E.CAPACITOR 50V 1U	1	
C215,16		ECUM1H270JCV	C.CAPACITOR CH 50V 27P	2	
C218,19		ECUM1H270JCV	C.CAPACITOR CH 50V 27P	2	
C220		ECSF1CE106	T.CAPACITOR 16V 10U	1	
C221,22		ECUM1H270JCV	C.CAPACITOR CH 50V 27P	2	
C223		ECUM1H6822FV	C.CAPACITOR CH 50V 6800P	1	
C225		ECUM1E104ZFN	C.CAPACITOR CH 25V 0.1U	1	
C226		ECEA1EKS100I	E.CAPACITOR 25V 10U	1	
C229		ECEA0JKS470	E.CAPACITOR 6.3V 47U	1	
C230-33		ECUM1E104ZFN	C.CAPACITOR CH 25V 0.1U	4	
C236		ECUM1H150JCV	C.CAPACITOR CH 50V 15P	1	

Ref.No.		Part No.	Part Name & Description	Pcs	Remarks
C237		ECUM1E104ZFN	C.CAPACITOR CH 25V 0.1U	1	
C238-40		ECUM1H330JCV	C.CAPACITOR CH 50V 33P	3	
C241		ECUM1H101JCV	C.CAPACITOR CH 50V 100P	1	
C242,43		ECUM1E104ZFN	C.CAPACITOR CH 25V 0.1U	2	
C244		ECUM1E473ZFN	C.CAPACITOR CH 25V 0.047U	1	
C245		ECUM1E104ZFN	C.CAPACITOR CH 25V 0.1U	1	
C246		ECUM1H150JCV	C.CAPACITOR CH 50V 15P	1	
C247		ECEV1CA100	E.CAPACITOR 16V 10U	1	
C248-50		ECUM1E104ZFN	C.CAPACITOR CH 25V 0.1U	3	
C251		ECUM1H330JCV	C.CAPACITOR CH 50V 33P	1	
C252,53		ECUM1E104ZFN	C.CAPACITOR CH 25V 0.1U	2	
C255		ECEV1CA100	E.CAPACITOR 16V 10U	1	
C260-63		ECUM1E104ZFN	C.CAPACITOR CH 25V 0.1U	4	
C280		ECSF1AE106	T.CAPACITOR 10V 10U	1	
C281		ECSF1CE106	T.CAPACITOR 16V 10U	1	
C282,83		ECUM1H180JCV	C.CAPACITOR CH 50V 18P	2	
C284		ECUM1E473ZFN	C.CAPACITOR CH 25V 0.047U	1	
C285		ECUM1H180JCV	C.CAPACITOR CH 50V 18P	1	
			DIODES		
D202		MA728	DIODE	1	
D204,05		MA110	DIODE	2	
D207		MA110	DIODE	1	
D209		MA141WK	DIODE	1	
D210-13		MA110	DIODE	4	
			FILTER		
FL201		ELB5B010	FILTER	1	
			CONNECTOR		
FP201		VJS2143	CONNECTOR (FEMALE)	1	
			ICS		
IC201		MN73912XWB	IC	1	
IC202		MN3107CS	IC	1	
IC203		AN2012S	IC	1	
L201		ELJFA150KF	COIL	1	
L203-07		ELJFA150KF	COIL	5	
L210-14		VLQ0291	COIL	5	
			TRANSISTORS		
Q201-03		2SD1819	TRANSISTOR	3	
Q204		2SC3930	TRANSISTOR	1	
Q205		2SA1610	TRANSISTOR	1	
Q206		2SC4176	TRANSISTOR	1	
Q207		2SA1610	TRANSISTOR	1	
Q208		2SC4176	TRANSISTOR	1	
Q209		2SA1610	TRANSISTOR	1	
Q210		2SC4176	TRANSISTOR	1	
			RESISTORS		
R201		ERJ3GEYJ331	M.RESISTOR CH 3W 330	1	
R202		ERJ3GEYJ151	M.RESISTOR CH 3W 150	1	
R203		ERJ3GEYJ105	M.RESISTOR CH 3W 1M	1	
R204		ERJ3GEYJ102	M.RESISTOR CH 3W 1K	1	
R205		ERJ3GEYJ333	M.RESISTOR CH 3W 33K	1	
R206		ERJ3GEYJ183	M.RESISTOR CH 3W 18K	1	
R207		ERJ3GEYJ103	M.RESISTOR CH 3W 10K	1	
R208		ERJ3GEYJ471	M.RESISTOR CH 3W 470	1	
R209		ERJ3GEYJ473	M.RESISTOR CH 3W 47K	1	
R210,11		ERJ3GEYJ472	M.RESISTOR CH 3W 4.7K	2	
R212		ERJ3GEYJ330	M.RESISTOR CH 3W 33	1	
R216		ERJ3GEYJ103	M.RESISTOR CH 3W 10K	1	
R217		ERJ3GEYJ101	M.RESISTOR CH 3W 100	1	
R218		ERJ3GEYJ472	M.RESISTOR CH 3W 4.7K	1	

Ref.No.		Part No.	Part Name & Description	Pcs	Remarks
R221		ERJ3GEYJ101	M.RESISTOR CH 3W 100	1	
R222		ERJ3GEYJ123	M.RESISTOR CH 3W 12K	1	
R223,24		ERJ3GEYJ221	M.RESISTOR CH 3W 220	2	
R225,26		ERJ3GEYJ102	M.RESISTOR CH 3W 1K	2	
R227		ERJ3GEYJ272	M.RESISTOR CH 3W 2.7K	1	
R228		ERJ3GEYJ221	M.RESISTOR CH 3W 220	1	
R229		ERJ3GEYJ102	M.RESISTOR CH 3W 1K	1	
R230		ERJ3GEYJ105	M.RESISTOR CH 3W 1M	1	
R231		ERJ3GEYJ104	M.RESISTOR CH 3W 100K	1	
R232,33		ERJ3GEYJ101	M.RESISTOR CH 3W 100	2	
R234		ERJ3GEYJ272	M.RESISTOR CH 3W 2.7K	1	
R235		ERJ3GEYJ104	M.RESISTOR CH 3W 100K	1	
R236		ERJ3GEYJ270	M.RESISTOR CH 3W 27	1	
R240		ERJ3GEYJ332	M.RESISTOR CH 3W 3.3K	1	
R270		ERJ8GCYJ330	M.RESISTOR CH 1/8W 33	1	
			V.RESISTORS		
VR201		EVM7JSX30B25	V.RESISTOR 200K	1	
VR202		EVM7JSX30B54	V.RESISTOR 50K	1	
			CRYSTAL OSCILLATOR		
X201		VSX0240	CRYSTAL OSCILLATOR	1	
	■	VEP23095A	PROCESS C.B.A.		(NLA)
			CONNECTORS		
B301		VJS1948	CONNECTOR	1	
B305		VJS1948	CONNECTOR	1	
			CAPACITORS		
C301		ECUM1H151JCV	C.CAPACITOR CH 50V 150P	1	
C303,04		ECST1CY105Z	T.CAPACITOR 16V 1U	2	
C305		ECUM1H102KBV	C.CAPACITOR CH 50V 1000P	1	
C306		ECUM1H103ZFV	C.CAPACITOR CH 50V 0.01U	1	
C307		ECUM1C105ZFM	C.CAPACITOR CH 16V 1U	1	
C308		ECUM1H103ZFV	C.CAPACITOR CH 50V 0.01U	1	
C309		ECUM1H680JCV	C.CAPACITOR CH 50V 68P	1	
C310		ECUM1H220JCV	C.CAPACITOR CH 50V 22P	1	
C311		ECUM1C105ZFM	C.CAPACITOR CH 16V 1U	1	
C312		ECUM1H102KBV	C.CAPACITOR CH 50V 1000P	1	
C313		ECST1CY105Z	T.CAPACITOR 16V 1U	1	
C314		ECSF1CE106	T.CAPACITOR 16V 10U	1	
C315		ECUM1H103ZFV	C.CAPACITOR CH 50V 0.01U	1	
C316,17		ECUM1C105ZFM	C.CAPACITOR CH 16V 1U	2	
C318,19		ECUM1H103ZFV	C.CAPACITOR CH 50V 0.01U	2	
C320,21		ECUM1E473ZFN	C.CAPACITOR CH 25V 0.047U	2	
C322		ECUM1E104ZFN	C.CAPACITOR CH 25V 0.1U	1	
C323		ECSF0JE226	T.CAPACITOR 6.3V 22U	1	
C324		ECUM1H103ZFV	C.CAPACITOR CH 50V 0.01U	1	
C325		ECEV1HA2R2	E.CAPACITOR 50V 2.2U	1	
C326		ECEA1CKK100	E.CAPACITOR 16V 10U	1	
C327		ECUM1H103ZFV	C.CAPACITOR CH 50V 0.01U	1	
C328,29		ECUM1E104ZFN	C.CAPACITOR CH 25V 0.1U	2	
C330		ECSF1AE226	T.CAPACITOR 10V 22U	1	
C331		ECUM1E473ZFN	C.CAPACITOR CH 25V 0.047U	1	
C332		ECEV1HA010	E.CAPACITOR 50V 1U	1	
C333		ECEV1HA3R3	E.CAPACITOR 50V 3.3U	1	
C334		ECUM1H101JCV	C.CAPACITOR CH 50V 100P	1	
C335		ECUM1E473ZFN	C.CAPACITOR CH 25V 0.047U	1	
C336,37		ECUM1E104ZFN	C.CAPACITOR CH 25V 0.1U	2	
C338,39		ECUM1E473ZFN	C.CAPACITOR CH 25V 0.047U	2	
C340,41		ECUM1E104ZFN	C.CAPACITOR CH 25V 0.1U	2	
C342		ECUM1E473ZFN	C.CAPACITOR CH 25V 0.047U	1	
C343		ECUM1E104ZFN	C.CAPACITOR CH 25V 0.1U	1	

Ref.No.		Part No.	Part Name & Description	Pcs	Remarks
C344		ECUM1H102KBV	C.CAPACITOR CH 50V 1000P	1	
C345		ECEV1CAN4R7R	E.CAPACITOR 16V 4.7U	1	
C346		ECST1AB475ZR	T.CAPACITOR 35V 4.7U	1	
C348		ECEA1CKS100	E.CAPACITOR 16V 10U	1	
C349		ECUM1H221JCV	C.CAPACITOR CH 50V 220P	1	
C350		ECEA1CKK100	E.CAPACITOR 16V 10U	1	
C351		ECUM1E104ZFN	C.CAPACITOR CH 25V 0.1U	1	
C353		ECUM1H330JCV	C.CAPACITOR CH 50V 33P	1	
C354		ECUM1C224ZFN	C.CAPACITOR CH 16V 0.22U	1	
C355,56		ECUM1H103ZFV	C.CAPACITOR CH 50V 0.01U	2	
C357		ECEA1HKK010	E.CAPACITOR 50V 1U	1	
C358		ECSF1AE226	T.CAPACITOR 10V 22U	1	
C360		ECUM1E104ZFN	C.CAPACITOR CH 25V 0.1U	1	
C361		ECEA1CKS330	E.CAPACITOR 16V 33U	1	
C362		ECUM1H270JCV	C.CAPACITOR CH 50V 27P	1	
C363,64		ECUM1E104ZFN	C.CAPACITOR CH 25V 0.1U	2	
C365		ECSF0JE336	T.CAPACITOR 6.3V 33U	1	
C366		ECUM1H103ZFV	C.CAPACITOR CH 50V 0.01U	1	
C368		ECUM1H271JCV	C.CAPACITOR CH 50V 270P	1	
C369		ECSF1AE106	T.CAPACITOR 10V 10U	1	
C371		ECST1CY105Z	T.CAPACITOR 16V 1U	1	
C372		ECEV0JA470	E.CAPACITOR 6.3V 47U	1	
C373		ECEA1CKS100	E.CAPACITOR 16V 10U	1	
C374-76		ECUM1E104ZFN	C.CAPACITOR CH 25V 0.1U	3	
C377		ECUM1H103ZFV	C.CAPACITOR CH 50V 0.01U	1	
C378		ECUM1H220JCV	C.CAPACITOR CH 50V 22P	1	
C380		ECUM1H330JCV	C.CAPACITOR CH 50V 33P	1	
C382		ECUM1H220JCV	C.CAPACITOR CH 50V 22P	1	
C384		ECEA1EKS4R7I	E.CAPACITOR 25V 4.7U	1	
C385		ECEA1CKS100	E.CAPACITOR 16V 10U	1	
C386		ECEV1CA100	E.CAPACITOR 16V 10U	1	
C387-89		ECUM1H560JCV	C.CAPACITOR CH 50V 56P	3	
C393		ECUM1H820JCV	C.CAPACITOR CH 50V 82P	1	
C395,96		ECUM1C105ZFM	C.CAPACITOR CH 16V 1U	2	
C398-00		ECUM1H103ZFV	C.CAPACITOR CH 50V 0.01U	3	
C401,02		ECUM1H151JCV	C.CAPACITOR CH 50V 150P	2	
C416		ECEA0GKS221	E.CAPACITOR 4V 220U	1	
C501		ECEV1AAN100	E.CAPACITOR 10V 10U	1	
C502,03		ECUM1E104ZFN	C.CAPACITOR CH 25V 0.1U	2	
C504		ECEV1AAN100	E.CAPACITOR 10V 10U	1	
C505,06		ECUM1E473ZFN	C.CAPACITOR CH 25V 0.047U	2	
C508		ECUM1E104ZFN	C.CAPACITOR CH 25V 0.1U	1	
			DIODES		
D301		MA141A	DIODE	1	
D305		MA141A	DIODE	1	
D306		MA141WK	DIODE	1	
D307		MA728	DIODE	1	
D308		MA3047M	DIODE	1	
D309,10		MA110	DIODE	2	
D501		MA141WA	DIODE	1	
D502		MA728	DIODE	1	
D503		MA141A	DIODE	1	
			FILTERS		
FL301		ELB4D009	FILTER	1	
FL302		VLF0664	FILTER	1	
FL303		ELB4B003	FILTER	1	
FL304		ELB4C011	FILTER	1	
FL305		VLF0798	FILTER	1	
FL307		ELB4D010	FILTER	1	
FL308		ELB4B030	FILTER	1	
			CONNECTORS		
FP306		VJS2137	CONNECTOR	1	
FP310		VJS2113	CONNECTOR (FEMALE)	1	
			ICS		
IC302		MN3819S	IC	1	
IC303		MN3820S	IC	1	
IC304		AN2154FAP	IC	1	

Ref.No.		Part No.	Part Name & Description	Pcs	Remarks
IC308,09		LM2904M	IC	2	
IC310		AN2254FAP	IC	1	
IC311		MN73512XWA	IC	1	
IC312		VCR0250	IC	1	
IC501		RZ4052BM	IC	1	
IC502		LM2902M	IC	1	
IC503		LM2904M	IC	1	
IC504,05		LM2902M	IC	2	
IC506		RC4558M	IC	1	
L301		VLQ0163K150	COIL 15UH	1	
L302		VLQ0319F150	COIL 15UH	1	
L303		VLQ0163K101	COIL 100UH	1	
L304-06		VLQ0163K150	COIL 15UH	3	
L307		VLQ0163K330	COIL 33UH	1	
L308,09		VLQ0163K150	COIL 15UH	2	
L310		VLQ0291	COIL	1	
L311		VLQ0163K150	COIL 15UH	1	
L312		VLQ0163K101	COIL 100UH	1	
L313		VLQ0163K330	COIL 33UH	1	
L316		VLQ0163K330	COIL 33UH	1	
			CONNECTORS		
P302		VJP1609T	CONNECTOR(MALE)	1	
P309		VJP2261	CONNECTOR(MALE)	1	
			TRANSISTORS		
Q301		2SD1819	TRANSISTOR	1	
Q302		2SC3931	TRANSISTOR	1	
Q303		2SB1218	TRANSISTOR	1	
Q304		2SA1532	TRANSISTOR	1	
Q305		XN4601	TRANSISTOR-RESISTOR	1	
Q306		XN4401	TRANSISTOR-RESISTOR	1	
Q308		XN4601	TRANSISTOR-RESISTOR	1	
Q310		2SB1218	TRANSISTOR	1	
Q312		2SD1819	TRANSISTOR	1	
Q313		2SC3931	TRANSISTOR	1	
Q314		2SD1819	TRANSISTOR	1	
Q315		XN4401	TRANSISTOR-RESISTOR	1	
Q317		2SD1819	TRANSISTOR	1	
Q320		XN4401	TRANSISTOR-RESISTOR	1	
Q322		XN4608	TRANSISTOR-RESISTOR	1	
Q324		2SA1532	TRANSISTOR	1	
Q328		XN4501	TRANSISTOR-RESISTOR	1	
Q505		XN4501	TRANSISTOR-RESISTOR	1	
Q508-10		XN4601	TRANSISTOR-RESISTOR	3	
			RESISTORS		
R301		ERJ3GEYJ102	M.RESISTOR CH 3W 1K	1	
R302		ERJ3GEYJ271	M.RESISTOR CH 3W 270	1	
R303		ERJ3GEYJ391	M.RESISTOR CH 3W 390	1	
R304		ERJ3GEYJ102	M.RESISTOR CH 3W 1K	1	
R305		ERJ3GEYJ471	M.RESISTOR CH 3W 470	1	
R306		ERJ3GEYJ222	M.RESISTOR CH 3W 2.2K	1	
R307		ERJ3GEYJ102	M.RESISTOR CH 3W 1K	1	
R308		ERJ3GEYJ182	M.RESISTOR CH 3W 1.8K	1	
R309		ERJ3GEYJ561	M.RESISTOR CH 3W 560	1	
R310		ERJ3GEYJ101	M.RESISTOR CH 3W 100	1	
R311,12		ERJ3GEYJ332	M.RESISTOR CH 3W 3.3K	2	
R313		ERJ3GEYJ472	M.RESISTOR CH 3W 4.7K	1	
R314		ERJ3GEYJ102	M.RESISTOR CH 3W 1K	1	
R315		ERJ3GEYJ182	M.RESISTOR CH 3W 1.8K	1	
R317		ERJ3GEYJ561	M.RESISTOR CH 3W 560	1	
R318		ERJ3GEYJ392	M.RESISTOR CH 3W 3.9K	1	
R319		ERJ3GEYJ102	M.RESISTOR CH 3W 1K	1	
R321		ERJ3GEYJ222	M.RESISTOR CH 3W 2.2K	1	
R322		ERJ3GEYJ102	M.RESISTOR CH 3W 1K	1	
R323		ERJ3GEYJ472	M.RESISTOR CH 3W 4.7K	1	
R324		ERJ3GEYJ222	M.RESISTOR CH 3W 2.2K	1	

Ref.No.		Part No.	Part Name & Description	Pcs	Remarks
R325,26		ERJ3GEYJ472	M.RESISTOR CH 3W 4.7K	2	
R327		ERJ3GEYJ102	M.RESISTOR CH 3W 1K	1	
R328		ERJ3GEYJ472	M.RESISTOR CH 3W 4.7K	1	
R329		ERJ3GEYJ183	M.RESISTOR CH 3W 18K	1	
R330		ERJ3GEYJ332	M.RESISTOR CH 3W 3.3K	1	
R331		ERJ3GEYJ562	M.RESISTOR CH 3W 5.6K	1	
R332		ERJ3GEYJ472	M.RESISTOR CH 3W 4.7K	1	
R333		ERJ3GEYJ822	M.RESISTOR CH 3W 8.2K	1	
R334		ERJ3GEYJ821	M.RESISTOR CH 3W 820	1	
R336		ERJ3GEYJ104	M.RESISTOR CH 3W 100K	1	
R337		ERJ3GEYJ154	M.RESISTOR CH 3W 150K	1	
R338		ERJ3GEYJ102	M.RESISTOR CH 3W 1K	1	
R339		ERJ3GEYJ393	M.RESISTOR CH 3W 39K	1	
R340		ERJ3GEYJ183	M.RESISTOR CH 3W 18K	1	
R341		ERJ3GEYJ153	M.RESISTOR CH 3W 15K	1	
R342		ERJ3GEYJ473	M.RESISTOR CH 3W 47K	1	
R343		ERJ3GEYJ273	M.RESISTOR CH 3W 27K	1	
R344		ERJ3GEYJ183	M.RESISTOR CH 3W 18K	1	
R345		ERJ3GEYJ333	M.RESISTOR CH 3W 33K	1	
R348		ERJ3GEYJ473	M.RESISTOR CH 3W 47K	1	
R349		ERJ3GEYJ103	M.RESISTOR CH 3W 10K	1	
R350		ERJ3GEYJ562	M.RESISTOR CH 3W 5.6K	1	
R351		ERJ3GEYJ560	M.RESISTOR CH 3W 56	1	
R352		ERJ3GEYJ104	M.RESISTOR CH 3W 100K	1	
R353		ERJ3GEYJ223	M.RESISTOR CH 3W 22K	1	
R354		ERJ3GEYJ273	M.RESISTOR CH 3W 27K	1	
R355		ERJ3GEYJ102	M.RESISTOR CH 3W 1K	1	
R357		ERJ3GEYJ273	M.RESISTOR CH 3W 27K	1	
R358		ERJ3GEYJ102	M.RESISTOR CH 3W 1K	1	
R359		ERJ3GEYJ104	M.RESISTOR CH 3W 100K	1	
R360		ERJ3GEYJ472	M.RESISTOR CH 3W 4.7K	1	
R361,62		ERJ3GEYJ333	M.RESISTOR CH 3W 33K	2	
R363		ERJ3GEYJ222	M.RESISTOR CH 3W 2.2K	1	
R364		ERJ3GEYJ472	M.RESISTOR CH 3W 4.7K	1	
R365		ERJ3GEYJ103	M.RESISTOR CH 3W 10K	1	
R366		ERJ3GEYJ102	M.RESISTOR CH 3W 1K	1	
R367		ERJ3GEYJ561	M.RESISTOR CH 3W 560	1	
R368		ERJ3GEYJ331	M.RESISTOR CH 3W 330	1	
R369-71		ERJ3GEYJ102	M.RESISTOR CH 3W 1K	3	
R374,75		ERJ3GEYJ472	M.RESISTOR CH 3W 4.7K	2	
R376		ERJ3GEYJ473	M.RESISTOR CH 3W 47K	1	
R377		ERJ3GEYJ102	M.RESISTOR CH 3W 1K	1	
R378		ERJ3GEYJ392	M.RESISTOR CH 3W 3.9K	1	
R379		ERJ3GEYJ103	M.RESISTOR CH 3W 10K	1	
R380		ERJ3GEYJ222	M.RESISTOR CH 3W 2.2K	1	
R381		ERJ3GEYJ152	M.RESISTOR CH 3W 1.5K	1	
R382		ERJ3GEYJ273	M.RESISTOR CH 3W 27K	1	
R383		ERJ3GEYJ683	M.RESISTOR CH 3W 68K	1	
R385		ERJ3GEYJ823	M.RESISTOR CH 3W 82K	1	
R386		ERJ3GEYJ183	M.RESISTOR CH 3W 18K	1	
R387		ERJ3GEYJ103	M.RESISTOR CH 3W 10K	1	
R388		ERJ3GEYJ182	M.RESISTOR CH 3W 1.8K	1	
R389		ERJ3GEYJ105	M.RESISTOR CH 3W 1M	1	
R390		ERJ3GEYJ123	M.RESISTOR CH 3W 12K	1	
R394		ERJ3GEYJ154	M.RESISTOR CH 3W 150K	1	
R396		ERJ3GEYJ154	M.RESISTOR CH 3W 150K	1	
R397		ERJ3GEYJ101	M.RESISTOR CH 3W 100	1	
R398		ERJ3GEYJ104	M.RESISTOR CH 3W 100K	1	
R399		ERJ3GEYJ563	M.RESISTOR CH 3W 56K	1	
R400		ERJ3GEYJ104	M.RESISTOR CH 3W 100K	1	
R401		ERJ3GEYJ103	M.RESISTOR CH 3W 10K	1	
R402,03		ERJ3GEYJ102	M.RESISTOR CH 3W 1K	2	
R404		ERJ3GEYJ472	M.RESISTOR CH 3W 4.7K	1	
R405		ERJ3GEYJ822	M.RESISTOR CH 3W 8.2K	1	
R406		ERJ3GEYJ681	M.RESISTOR CH 3W 680	1	
R408		ERJ3GEYJ681	M.RESISTOR CH 3W 680	1	
R409		ERJ3GEYJ103	M.RESISTOR CH 3W 10K	1	
R410		ERJ3GEYJ392	M.RESISTOR CH 3W 3.9K	1	
R411		ERJ3GEYJ102	M.RESISTOR CH 3W 1K	1	
R412		ERJ3GEYJ182	M.RESISTOR CH 3W 1.8K	1	
R413		ERJ3GEYJ222	M.RESISTOR CH 3W 2.2K	1	
R414		ERJ3GEYJ391	M.RESISTOR CH 3W 390	1	
R415		ERJ3GEYJ103	M.RESISTOR CH 3W 10K	1	
R416		ERJ3GEYJ562	M.RESISTOR CH 3W 5.6K	1	
R417		ERJ3GEYJ102	M.RESISTOR CH 3W 1K	1	

Ref.No.		Part No.	Part Name & Description	Pcs	Remarks
R418		ERJ3GEYJ103	M.RESISTOR CH 3W 10K	1	
R419		ERJ3GEYJ152	M.RESISTOR CH 3W 1.5K	1	
R426		ERJ3GEYJ102	M.RESISTOR CH 3W 1K	1	
R427		ERJ3GEYJ472	M.RESISTOR CH 3W 4.7K	1	
R428		ERJ3GEY0R00	M.RESISTOR CH 3W 0.00	1	
R429		ERJ3GEYJ222	M.RESISTOR CH 3W 2.2K	1	
R431		ERJ3GEYJ223	M.RESISTOR CH 3W 22K	1	
R432		ERJ3GEYJ563	M.RESISTOR CH 3W 56K	1	
R433		ERJ3GEYJ333	M.RESISTOR CH 3W 33K	1	
R434		ERJ3GEYJ102	M.RESISTOR CH 3W 1K	1	
R435		ERJ3GEYJ103	M.RESISTOR CH 3W 10K	1	
R436		ERJ3GEYJ392	M.RESISTOR CH 3W 3.9K	1	
R437,38		ERJ3GEYJ102	M.RESISTOR CH 3W 1K	2	
R439		ERJ3GEYJ472	M.RESISTOR CH 3W 4.7K	1	
R440		ERJ3GEYJ103	M.RESISTOR CH 3W 10K	1	
R442		ERJ3GEYJ473	M.RESISTOR CH 3W 47K	1	
R443,44		ERJ3GEYJ182	M.RESISTOR CH 3W 1.8K	2	
R445-47		ERJ3GEYJ222	M.RESISTOR CH 3W 2.2K	3	
R448		ERJ3GEYJ332	M.RESISTOR CH 3W 3.3K	1	
R449		ERJ3GEYJ392	M.RESISTOR CH 3W 3.9K	1	
R450		ERJ3GEYJ123	M.RESISTOR CH 3W 12K	1	
R451		ERJ3GEYJ823	M.RESISTOR CH 3W 82K	1	
R452		ERJ3GEYJ123	M.RESISTOR CH 3W 12K	1	
R453		ERJ3GEYJ564	M.RESISTOR CH 3W 560K	1	
R456,57		ERJ3GEYJ153	M.RESISTOR CH 3W 15K	2	
R458		ERJ3GEYJ182	M.RESISTOR CH 3W 1.8K	1	
R459		ERJ3GEYJ392	M.RESISTOR CH 3W 3.9K	1	
R460		ERJ3GEYJ221	M.RESISTOR CH 3W 220	1	
R461		ERJ3GEYJ471	M.RESISTOR CH 3W 470	1	
R462		ERJ3GEYJ102	M.RESISTOR CH 3W 1K	1	
R463		ERJ3GEYJ392	M.RESISTOR CH 3W 3.9K	1	
R465		ERJ3GEYJ681	M.RESISTOR CH 3W 680	1	
R468		ERJ3GEYJ154	M.RESISTOR CH 3W 150K	1	
R501,02		ERJ3GEYJ682	M.RESISTOR CH 3W 6.8K	2	
R503,04		ERJ3GEYJ104	M.RESISTOR CH 3W 100K	2	
R505		ERJ3GEYJ334	M.RESISTOR CH 3W 330K	1	
R506,07		ERJ3GEYJ103	M.RESISTOR CH 3W 10K	2	
R508		ERJ3GEYJ104	M.RESISTOR CH 3W 100K	1	
R509		ERJ3GEYJ224	M.RESISTOR CH 3W 220K	1	
R510		ERJ3GEYJ154	M.RESISTOR CH 3W 150K	1	
R511		ERJ3GEYJ224	M.RESISTOR CH 3W 220K	1	
R512,13		ERJ3GEYJ103	M.RESISTOR CH 3W 10K	2	
R514,15		ERJ3GEYJ104	M.RESISTOR CH 3W 100K	2	
R516		ERJ3GEYJ334	M.RESISTOR CH 3W 330K	1	
R517		ERJ3GEYJ102	M.RESISTOR CH 3W 1K	1	
R518		ERJ3GEYJ106	M.RESISTOR CH 3W 10M	1	
R519		ERJ3GEYJ563	M.RESISTOR CH 3W 56K	1	
R520		ERJ3GEYJ274	M.RESISTOR CH 3W 270K	1	
R521		ERJ3GEYJ334	M.RESISTOR CH 3W 330K	1	
R522		ERJ3GEYJ335	M.RESISTOR CH 3W 3.3M	1	
R523		ERJ3GEYJ563	M.RESISTOR CH 3W 56K	1	
R524		ERJ3GEYJ564	M.RESISTOR CH 3W 560K	1	
R525		ERJ3GEYJ102	M.RESISTOR CH 3W 1K	1	
R526		ERJ3GEYJ106	M.RESISTOR CH 3W 10M	1	
R527		ERJ3GEYJ563	M.RESISTOR CH 3W 56K	1	
R528		ERJ3GEYJ274	M.RESISTOR CH 3W 270K	1	
R529		ERJ3GEYJ334	M.RESISTOR CH 3W 330K	1	
R530		ERJ3GEYJ335	M.RESISTOR CH 3W 3.3M	1	
R531		ERJ3GEYJ563	M.RESISTOR CH 3W 56K	1	
R532		ERJ3GEYJ564	M.RESISTOR CH 3W 560K	1	
R533		ERJ3GEYJ104	M.RESISTOR CH 3W 100K	1	
R534-36		ERJ3GEYJ103	M.RESISTOR CH 3W 10K	3	
R537		ERJ3GEYJ224	M.RESISTOR CH 3W 220K	1	
R538		ERJ3GEYJ154	M.RESISTOR CH 3W 150K	1	
R539		ERJ3GEYJ823	M.RESISTOR CH 3W 82K	1	
R540,41		ERJ3GEYJ103	M.RESISTOR CH 3W 10K	2	
R542		ERJ3GEYJ224	M.RESISTOR CH 3W 220K	1	
R543		ERJ3GEYJ103	M.RESISTOR CH 3W 10K	1	
R544-53		ERJ3GEYJ333	M.RESISTOR CH 3W 33K	10	
R554,55		ERJ3GEYJ103	M.RESISTOR CH 3W 10K	2	
R562		ERJ3GEYJ102	M.RESISTOR CH 3W 1K	1	
R569-71		ERJ3GEYJ103	M.RESISTOR CH 3W 10K	3	
R572		ERJ3GEYJ102	M.RESISTOR CH 3W 1K	1	
R574,75		ERJ3GEYJ104	M.RESISTOR CH 3W 100K	2	
R576		ERJ3GEYJ222	M.RESISTOR CH 3W 2.2K	1	

Ref.No.		Part No.	Part Name & Description	Pcs	Remarks
R579		ERJ3GEYJ102	M.RESISTOR CH 3W 1K	1	
R580		ERJ3GEYJ104	M.RESISTOR CH 3W 100K	1	
R581		ERJ3GEYJ222	M.RESISTOR CH 3W 2.2K	1	
R582		ERJ3GEYJ104	M.RESISTOR CH 3W 100K	1	
R583		ERJ3GEYJ102	M.RESISTOR CH 3W 1K	1	
R584		ERJ3GEYOR00	M.RESISTOR CH 3W 0.00	1	
R585		ERJ3GEYJ103	M.RESISTOR CH 3W 10K	1	
R586		ERJ3GEYJ102	M.RESISTOR CH 3W 1K	1	
R587,88		ERJ3GEYJ123	M.RESISTOR CH 3W 12K	2	
R589		ERJ3GEYJ102	M.RESISTOR CH 3W 1K	1	
R590		ERJ3GEYJ183	M.RESISTOR CH 3W 18K	1	
R591		ERJ3GEYJ124	M.RESISTOR CH 3W 120K	1	
R592,93		ERJ3GEYJ223	M.RESISTOR CH 3W 22K	2	
R594		ERJ3GEYJ224	M.RESISTOR CH 3W 220K	1	
			V.RESISTORS		
VR301		EVM7JSX30B14	V.RESISTOR 10K	1	
VR303		EVM7JSX30B24	V.RESISTOR 20K	1	
VR304		EVM7JSX30B54	V.RESISTOR 50K	1	
VR305-07		EVM7JSX30B24	V.RESISTOR 20K	3	
VR309,10		EVM7JSX30B24	V.RESISTOR 20K	2	
VR311,12		EVM7JSX30B14	V.RESISTOR 10K	2	
VR313-15		EVM7JSX30B13	V.RESISTOR 1K	3	
VR317-20		EVM7JSX30B53	V.RESISTOR 5K	4	
VR322		EVM7JSX30B54	V.RESISTOR 50K	1	
VR324		EVM7JSX30B14	V.RESISTOR 10K	1	
VR327		EVM7JSX30B14	V.RESISTOR 10K	1	
VR328		EVM7JSX30B24	V.RESISTOR 20K	1	
VR329		EVM7JSX30B14	V.RESISTOR 10K	1	
VR523		EVM7JSX30B54	V.RESISTOR 50K	1	
VR525,26		EVM7JSX30B24	V.RESISTOR 20K	2	
VR527		EVM7JSX30B54	V.RESISTOR 50K	1	
VR528,29		EVM7JSX30B14	V.RESISTOR 10K	2	
VR530,31		EVM7JSX30B54	V.RESISTOR 50K	2	
VR532		EVM7JSX30B53	V.RESISTOR 5K	1	
VR533		EVM7JSX30B15	V.RESISTOR 100K	1	
	■	VEP27044B	AUTO FOCUS C.B.A.		(NLA)
			CONNECTOR		
B701		VJP1948	CONNECTOR(MALE)	1	
			CAPACITORS		
C701		ECEA0JU471	E.CAPACITOR 6.3V 470U	1	
C702		ECUM1H180JCV	C.CAPACITOR CH 50V 18P	1	
C703		ECRJA030E12	V.CAPACITOR	1	
C706		ECUM1H101JCV	C.CAPACITOR CH 50V 100P	1	
C710,11		ECUM1E473KBM	C.CAPACITOR CH 25V 0.047U	2	
C712		ECEA0JKS101	E.CAPACITOR 6.3V 100U	1	
C713		ECUM1E104ZFN	C.CAPACITOR CH 25V 0.1U	1	
C714		ECEA0JKS101	E.CAPACITOR 6.3V 100U	1	
C715		ECSF1AE106	T.CAPACITOR 10V 10U	1	
C716-19		ECEA1CKS100	E.CAPACITOR 16V 10U	4	
C720		ECEA0JSN220	E.CAPACITOR 6.3V 22U	1	
C721		ECUM1E473ZFN	C.CAPACITOR CH 25V 0.047U	1	
C722-24		ECUM1E273KBN	C.CAPACITOR CH 25V 0.027U	3	
C725		ECUM1E683ZFN	C.CAPACITOR CH 25V 0.063U	1	
C726		ECUM1E104ZFN	C.CAPACITOR CH 25V 0.1U	1	
C727-29		ECUM1C224ZFN	C.CAPACITOR CH 16V 0.22U	3	
C730		ECUM1H330JCV	C.CAPACITOR CH 50V 33P	1	
C731		ECUM1E473ZFN	C.CAPACITOR CH 25V 0.047U	1	
C732-35		ECUM1H103ZFV	C.CAPACITOR CH 50V 0.01U	4	
C736		ECUV1H331KBN	C.CAPACITOR CH 50V 330P	1	
C737		ECRJA020E12X	.CAPACITOR V	1	
C738,39		ECUM1C224ZFN	C.CAPACITOR CH 16V 0.22U	2	

Ref.No.		Part No.	Part Name & Description	Pcs	Remarks
C740		ECEA1CKS100	E.CAPACITOR 16V 10U	1	
C741		ECST1AC106Z	T.CAPACITOR 10V 10U	1	
C742		ECUM1C105ZFM	C.CAPACITOR CH 16V 1U	1	
C743		ECUM1E104ZFN	C.CAPACITOR CH 25V 0.1U	1	
C744,45		ECEA0JKS470	E.CAPACITOR 6.3V 47U	2	
C746		ECUM1H103ZFV	C.CAPACITOR CH 50V 0.01U	1	
C747		ECUM1E104ZFN	C.CAPACITOR CH 25V 0.1U	1	
C748		ECEA1CU100	E.CAPACITOR 16V 10U	1	
C749,50		ECUM1E104ZFN	C.CAPACITOR CH 25V 0.1U	2	
C751		ECEA0JKS470	E.CAPACITOR 6.3V 47U	1	
			DIODES		
D702		MA141A	DIODE	1	
D703,04		1SS250	DIODE	2	
			FILTERS		
FL701		ELB4B004	FILTER	1	
FL702		VLF0595	FILTER	1	
FL703		ELB4B005	FILTER	1	
FL704		ELB4D001	FILTER	1	
FL705		VLF0596	FILTER	1	
			CONNECTOR		
FP701		VJS2112	CONNECTOR(FEMALE)	1	
			ICS		
IC701		MN15867VFK	IC	1	
IC702		AN2584NFAP	IC	1	
IC704		AN6545SP	IC	1	
IC705		NJM3415M	IC	1	
IC706		AN6664S	IC	1	
			COILS		
L701		VLQ0436	COIL	1	
L702		VLQ0319K101	COIL 100UH	1	
L703		VLQ0163K330	COIL 33UH	1	
L704		VLQ0319F150	COIL 15UH	1	
			CONNECTORS		
P702		VJP1595R	CONNECTOR(MALE) 2P	1	
P704		VJP1596T	CONNECTOR(MALE) 3P	1	
P705		VJP1595T	CONNECTOR(MALE) 2P	1	
P706		VJP1608T	CONNECTOR(MALE)	1	
P707		VJP1603T	CONNECTOR(MALE) 10P	1	
			TRANSISTORS		
Q701		UN2211	TRANSISTOR-RESISTOR	1	
Q704		2SA1255	TRANSISTOR	1	
Q705		2SC3138	TRANSISTOR	1	
Q706,07		2SD1819	TRANSISTOR	2	
Q708		2SD1483	TRANSISTOR	1	
			RESISTORS		
R701		ERJ3GEYJ220	M.RESISTOR CH 3W 22	1	
R702,03		ERJ3GEYJ563	M.RESISTOR CH 3W 56K	2	
R704-06		ERJ3GEYJ103	M.RESISTOR CH 3W 10K	3	
R707,08		ERJ3GEYJ563	M.RESISTOR CH 3W 56K	2	
R709		ERJ3GEYJ102	M.RESISTOR CH 3W 1K	1	
R710-16		ERJ3GEYJ104	M.RESISTOR CH 3W 100K	7	
R717		ERJ3GEYJ123	M.RESISTOR CH 3W 12K	1	
R718		ERJ3GEYJ154	M.RESISTOR CH 3W 150K	1	
R719		ERJ3GEYG473	M.RESISTOR CH 3W 47K	1	
R720		ERJ3GEYG563	M.RESISTOR CH 3W 56K	1	
R721,22		ERJ3GEYJ154	M.RESISTOR CH 3W 150K	2	
R723		ERJ3GEYG563	M.RESISTOR CH 3W 56K	1	
R724		ERJ3GEYG473	M.RESISTOR CH 3W 47K	1	

Ref.No.		Part No.	Part Name & Description	Pcs	Remarks
R725		ERJ3GEYJ103	M.RESISTOR CH 3W 10K	1	
R728		ERJ3GEYJ823	M.RESISTOR CH 3W 82K	1	
R729		ERJ3GEYJ394	M.RESISTOR CH 3W 390K	1	
R730		ERJ3GEYJ474	M.RESISTOR CH 3W 470K	1	
R731		ERJ3GEYJ103	M.RESISTOR CH 3W 10K	1	
R732		ERJ3GEYG822	M.RESISTOR CH 3W 8.2K	1	
R733		ERJ3GEYG472	M.RESISTOR CH 3W 4.7K	1	
R734-38		ERJ3GEYJ102	M.RESISTOR CH 3W 1K	5	
R739		ERJ3GEYJ823	M.RESISTOR CH 3W 82K	1	
R742		ERJ3GEYJ102	M.RESISTOR CH 3W 1K	1	
R743		ERJ3GEYJ472	M.RESISTOR CH 3W 4.7K	1	
R744		ERJ3GEYJ103	M.RESISTOR CH 3W 10K	1	
R745		ERJ3GEYJ100	M.RESISTOR CH 3W 10	1	
R746		ERJ3GEYJ273	M.RESISTOR CH 3W 27K	1	
R747		ERJ3GEYJ104	M.RESISTOR CH 3W 100K	1	
R748,49		ERJ3GEYJ274	M.RESISTOR CH 3W 270K	2	
R750		ERJ3GEYJ561	M.RESISTOR CH 3W 560	1	
R752		ERJ3GEYJ273	M.RESISTOR CH 3W 27K	1	
R753		ERJ3GEYJ682	M.RESISTOR CH 3W 6.8K	1	
R754		ERJ3GEYJ564	M.RESISTOR CH 3W 560K	1	
R758		ERJ3GEYJ221	M.RESISTOR CH 3W 220	1	
R760,61		ERJ3GEYJ332	M.RESISTOR CH 3W 3.3K	2	
R762		ERJ3GEYJ221	M.RESISTOR CH 3W 220	1	
			TRANSFORMAR		
T701		ETE13K43AY	TRANSFORMAR	1	
			V.RESISTORS		
VR701		EVLHGNA12A54	V.RESISTOR 50K	1	
VR703		EVM7JSX30B14	V.RESISTOR 10K	1	
			CRYSTAL OSCILLATOR		
X701		VSX0299	CRYSTAL OSCILLATOR	1	
	■	VEP06614A	CAMERA OPERATION C.B.A.		(NLA)
			CAPACITORS		
C6701,02		ECEA0JKS470	E.CAPACITOR 6.3V 47U	2	
			DIODES		
D6701		BR3668S	DIODE	1	
D6702-09		MA165	DIODE	8	
			CONNECTORS		
P6701		VJP1614T	CONNECTOR(MALE)	1	
P6702		VJP1606T	CONNECTOR(MALE)	1	
P6703		VJP1612T	CONNECTOR(MALE)	1	
P6704		VJP1607T	CONNECTOR(MALE)	1	
			TRANSISTORS		
Q6701		2SD636	TRANSISTOR	1	(Q,R,S)
Q6702		2SB641	TRANSISTOR	1	(Q,R,S)
Q6703		2SD636	TRANSISTOR	1	(Q,R,S)
			RESISTORS		
R6703		ERDS2TJ183	C.RESISTOR 1/4W 18K	1	
R6704		ERDS2TJ124	C.RESISTOR 1/4W 120K	1	

Ref.No.		Part No.	Part Name & Description	Pcs	Remarks
R6705		ERDS2TJ154	C.RESISTOR 1/4W 150K	1	
R6708		ERDS2TJ102	C.RESISTOR 1/4W 1K	1	
R6731		ERDS2TJ102	C.RESISTOR 1/4W 1K	1	
R6732		ERDS2TJ394	C.RESISTOR 1/4W 390K	1	
R6733		ERDS2TJ153	C.RESISTOR 1/4W 15K	1	
R6734		ERDS2TJ333	C.RESISTOR 1/4W 33K	1	
R6735		ERDS2TJ223	C.RESISTOR 1/4W 22K	1	
R6736		ERDS2TJ153	C.RESISTOR 1/4W 15K	1	
R6737		ERDS2TJ393	C.RESISTOR 1/4W 39K	1	
			SWITCHES		
SW6701-09		EVQQSU04W	SWITCH	9	
SW6710		VSS0170	SWITCH	1	
SW6711		VSS0126	SWITCH	1	
	■	VEP00P37A	AF & ZOOM POSITION C.B.A.		(NLA)
		ERDS2TJ181T	RESISTOR	1	
		ON2170	PHOTO CUPLER	2	
			MISCELLANEOUS		
		VJF0771	HOLDER	1	
	■	VEP27033G	E.V.F. C.B.A.		(NLA)
			CAPACITORS		
C701		ECEA0JKS101	E.CAPACITOR 6.3V 100U	1	
C702		ECSE1CY684V	T.CAPACITOR 16V 0.68U	1	
C703		ECEA1CKS100	E.CAPACITOR 16V 10U	1	
C704		ECEA0JKS470	E.CAPACITOR 6.3V 47U	1	
C705		ECEA1CKE101	E.CAPACITOR 16V 100U	1	
C706		ECUM1H681JCN	C.CAPACITOR CH 50V 680P	1	
C707		ECUM1C224ZFN	C.CAPACITOR CH 16V 0.22U	1	
C708		ECUM1E223KBN	C.CAPACITOR CH 25V 0.023U	1	
C709		ECEA1CKS100	E.CAPACITOR 16V 10U	1	
C710		ECUM1H152JN	C.CAPACITOR CH 50V 1500P	1	
C711		ECEA1CKS100	E.CAPACITOR 16V 10U	1	
C712		ECEA1AF470	E.CAPACITOR 10V 47U	1	
C713		ECEA0JK221	E.CAPACITOR 6.3V 220U	1	
C714		ECQK1392JZ	P.CAPACITOR 100V 3900P	1	
C715		ECEA1CKS220	E.CAPACITOR 16V 22U	1	
C716		ECUM1H181KN	C.CAPACITOR CH 50V 180P	1	
C717		ECEA1HKS4R7	E.CAPACITOR 50V 4.7U	1	
C718		VCK0075K121	C.CAPACITOR 120P	1	
C719		VCK0058K331	C.CAPACITOR 330P	1	
C720,21		ECUM1H473ZFN	C.CAPACITOR CH 50V 0.047U	2	
C722		ECUM1H104ZFN	C.CAPACITOR CH 50V 0.1U	1	
			DIODES		
D701		MA151K	DIODE	1	
D702		ERA91-02	DIODE	1	
D703		ERA34-10	DIODE	1	
			ICS		
IC701		AN2510S	IC	1	
			COILS		
L701		ELC04D007	COIL	1	
L702		ELH5L328	COIL	1	
			CONNECTORS		

Ref.No.		Part No.	Part Name & Description	Pcs	Remarks
P701		VJP1234	CONNECTOR(MALE)	1	
P702		VJP1231T	CONNECTOR(MALE) 4P	1	
P703		VJP1229T	CONNECTOR(MALE)	1	
			TRANSISTORS		
Q701		2SB709	TRANSISTOR CHIP	1	
Q702		2SD968A	TRANSISTOR	1	
Q703		2SA1022	TRANSISTOR	1	
			RESISTORS		
R701		ERJ6GEYK6R8	M.RESISTOR CH 1/10W 6.8	1	
R702		ERJ6GEYG682	M.REISITOR CH 1/10W 6.8K	1	
R703		ERJ6GEYJ392	M.RESISTOR CH 1/10W 3.9K	1	
R704		ERJ6GEYJ182	M.RESISTOR CH 1/10W 1.8K	1	
R705		ERJ6GEYK4R7	M.RESISTOR CH 1/10W 4.7	1	
R706		ERJ6GEYJ150	M.RESISTOR CH 1/10W 15	1	
R707		ERJ6GEYJ151	M.RESISTOR CH 1/10W 150	1	
R708		ERJ6GEYJ102	M.RESISTOR CH 1/10W 1K	1	
R709		ERJ6GEYJ163	M.RESISTOR CH 1/10W 16K	1	
R710		ERJ6GEYJ561	M.RESISTOR CH 1/10W 560	1	
R711		ERJ6GEYJ102	M.RESISTOR CH 1/10W 1K	1	
R712		ERJ6GEYJ683	M.RESISTOR CH 1/10W 68K	1	
R713		ERJ6GEYJ222	M.RESISTOR CH 1/10W 2.2K	1	
R714		ERJ6GEYJ562	M.RESISTOR CH 1/10W 5.6K	1	
R715,16		ERJ6GEYJ102	M.RESISTOR CH 1/10W 1K	2	
R717		ERJ6GEYJ561	M.RESISTOR CH 1/10W 560	1	
R718		ERJ6GEYJ222	M.RESISTOR CH 1/10W 2.2K	1	
R719		ERJ8GCYJ222	M.RESISTOR CH 1/8W 2.2K	1	
R720		ERJ6GEYJ274	M.RESISTOR CH 1/10W 270K	1	
R721		ERJ6GEYJ223	M.RESISTOR CH 1/10W 22K	1	
R722		ERJ6GEYJ682	M.RESISTOR CH 1/10W 6.8K	1	
R723		ERJ6GEYJ102	M.RESISTOR CH 1/10W 1K	1	
R724		ERJ6GEYJ105	M.RESISTOR CH 1/10W 1M	1	
R726,27		ERJ6GEYK155	M.RESISTOR CH 1/10W 1.5M	2	
R728		ERJ6GEYK335	M.RESISTOR CH 1/10W 3.3M	1	
R729		ERJ6GEYJ474	M.RESISTOR CH 1/10W 470K	1	
R730		ERJ6GEYJ821	M.RESISTOR CH 1/10W 820	1	
R731		ERJ8GCYJ272	M.RESISTOR CH 1/8W 2.7K	1	
			FLYBACK TRANS.		
T701		ETF14L35A	FLYBACK TRANS.	1	
			THERMISTER		
TH701		VRT0012	THERMISTER	1	
			V.RESISTORS		
VR701		VRV0079B221K	V.RESISTOR 2.2K	1	
VR702		VRV0079B472K	V.RESISTOR 4.7K	1	
VR704		VRV0027B225K	V.RESISTOR 2.2M	1	
VR705		VRV0027B105K	V.RESISTOR 1M	1	
	■	VEP27042A	E.V.F. LED C.B.A.		(NLA)
			DIODE		
D761		SLM126VRS	DIODE	1	
			CONNECTOR		
P761		VJP1229T	CONNECTOR (MALE)	1	

Ref.No.		Part No.	Part Name & Description	Pcs	Remarks
			RESISTORS		
R761		ERJ6GEYJ272	M.RESISTOR CH 1/10W 2.7K	1	
	■	VEP27043A	E.V.F. TALLEY LED C.B.A.		(NLA)
			DIODE		
D751		EBR5773X	DIODE	1	
			CONNECTOR		
P751		VJP1229T	CONNECTOR (MALE)	1	
			RESISTORS		
R751		ERJ8GCYJ151	M.RESISTOR CH 1/8W 150	1	
			MISCELLANEOUS		
		VMX1615	LED SPACER	1	
	■	VEP06612C	MAIN C.B.A.		(NLA)
			CAPACITORS		
C1001		ECUM1H820JCV	C.CAPACITOR CH 50V 82P	1	
C1002		ECUM1H561KBV	C.CAPACITOR CH 50V 560P	1	
C1003		ECUM1H391KBV	C.CAPACITOR CH 50V 390P	1	
C1010		ECEA1EU101	E.CAPACITOR 25V 100U	1	
C1011		ECUX1H473ZFN	C.CAPACITOR CH 50V 0.047U	1	
C1012		ECEA1AGE221	E.CAPACITOR 10V 220U	1	
C1013		ECUM1H223KBN	C.CAPACITOR CH 50V 0.022U	1	
C1014		ECUM1H223ZFV	C.CAPACITOR CH 50V 0.022U	1	
C1015,16		ECEA1AGE221	E.CAPACITOR 10V 220U	2	
C1017		ECEA1CKA220	E.CAPACITOR 16V 22U	1	
C1018,19		ECEA1AGE221	E.CAPACITOR 10V 220U	2	
C1020,21		ECEA1CKJ101	E.CAPACITOR 16V 100U	2	
C1026		ECUM1H153ZFV	C.CAPACITOR CH 50V 0.015U	1	
C1027		ECUM1H272KBV	C.CAPACITOR CH 50V 2700U	1	
C1028		ECEA1CKA470L	E.CAPACITOR 16V 47U	1	
C1029		ECEA1CU101I	E.CAPACITOR 16V 100U	1	
C1030,31		ECEA1AKA330	E.CAPACITOR 10V 33U	2	
C1032		ECUM1H472KBV	C.CAPACITOR CH 50V 4700P	1	
C1033		ECEA1CKK100	E.CAPACITOR 16V 10U	1	
C1034		ECUM1H103ZFV	C.CAPACITOR CH 50V 0.01U	1	
C1035		ECEA1AGE221	E.CAPACITOR 10V 220U	1	
C1040		ECUM1H223ZFV	C.CAPACITOR CH 50V 0.022U	1	
C1041		ECEA1AKA221	E.CAPACITOR 10V 220U	1	
C1042		ECUM1C1042FV	C.CAPACITOR CH 16V 0.1U	1	
C1043		ECEAOJKA101	E.CAPACITOR 6.3V 100U	1	
C1044		ECEAOJKS220	E.CAPACITOR 6.3V 22U	1	
C2001,02		ECUM1H101JCV	C.CAPACITOR CH 50V 100P	2	
C2003		ECUM1H103ZFV	C.CAPACITOR CH 50V 0.01U	1	
C2004,05		ECEAOJKA470	E.CAPACITOR 6.3V 47U	2	

Ref.No.		Part No.	Part Name & Description	Pcs	Remarks
C2006		ECUM1C473ZFV	C.CAPACITOR CH 16V 0.047U	1	
C2007		ECUM1H472ZFV	C.CAPACITOR CH 50V 4700P	1	
C2009,10		ECEA1CKA220	E.CAPACITOR 16V 22U	2	
C2011		ECUM1C473ZFV	C.CAPACITOR CH 16V 0.047U	1	
C2012		ECUM1H222KBV	C.CAPACITOR CH 50V 2200P	1	
C2013		ECUM1H102KBV	C.CAPACITOR CH 50V 1000P	1	
C2014		ECEA1VKN2R2	E.CAPACITOR 35V 2.2U	1	
C2015,16		ECUM1C105ZFM	C.CAPACITOR CH 16V 1U	2	
C2017,18		ECUM1H102KBV	C.CAPACITOR CH 50V 1000P	2	
C2019		ECEA0JKA470	E.CAPACITOR 6.3V 47U	1	
C2020		ECUM1H471KBV	C.CAPACITOR CH 50V 470P	1	
C2021,22		ECUM1C105ZFM	C.CAPACITOR CH 16V 1U	2	
C2023		ECUX1E333ZFN	C.CAPACITOR CH 25V 0.033U	1	
C2024		ECEA1CKA220	E.CAPACITOR 16V 22U	1	
C2025,26		ECEA0JKA470	E.CAPACITOR 6.3V 47U	2	
C2027		ECUM1H103ZFV	C.CAPACITOR CH 50V 0.01U	1	
C2028		ECUM1C105ZFM	C.CAPACITOR CH 16V 1U	1	
C2029		ECUM1H102KBV	C.CAPACITOR CH 50V 1000P	1	
C2030		ECUM1C104ZFV	C.CAPACITOR CH 16V 0.1U	1	
C2032		ECUM1H103ZFV	C.CAPACITOR CH 50V 0.01U	1	
C2033		ECUM1C105ZFM	C.CAPACITOR CH 16V 1U	1	
C2034		ECUM1H101JCV	C.CAPACITOR CH 50V 100P	1	
C2035		ECUM1H102KBV	C.CAPACITOR CH 50V 1000P	1	
C2036		ECUM1E104ZFM	C.CAPACITOR CH 25V 0.1U	1	
C2037		ECEA0JKA470	E.CAPACITOR 6.3V 47U	1	
C2038		ECEA0JKA220	E.CAPACITOR 6.3V 22U	1	
C2039		ECEA0JKA101	E.CAPACITOR 6.3V 100U	1	
C2040		ECUM1H103ZFV	C.CAPACITOR CH 50V 0.01U	1	
C2041		ECUM1C105ZFM	C.CAPACITOR CH 16V 1U	1	
C2042		ECEA0JKA470	E.CAPACITOR 6.3V 47U	1	
C2043		ECEA1CKK100	E.CAPACITOR 16V 10U	1	
C2044		ECUM1C184ZFN	C.CAPACITOR CH 16V 0.18U	1	
C2045		ECQV1H393JZ	P.CAPACITOR 50V 0.039U	1	
C2046-48		ECUM1H103ZFV	C.CAPACITOR CH 50V 0.01U	3	
C2049		ECUM1C333ZFV	C.CAPACITOR CH 16V 0.033U	1	
C2050		ECUM1C104ZFV	C.CAPACITOR CH 16V 0.1U	1	
C2051,52		ECEA0JKA470	E.CAPACITOR 6.3V 47U	2	
C2053		ECEA0JKA101	E.CAPACITOR 6.3V 100U	1	
C2054		ECUM1C333ZFV	C.CAPACITOR CH 16V 0.033U	1	
C2055		ECEA0JKA470	E.CAPACITOR 6.3V 47U	1	
C2056-58		ECEA1EKN3R3	E.CAPACITOR 25V 3.3U	3	
C2059-61		ECUM1H472ZFV	C.CAPACITOR CH 50V 4700P	3	
C2062-64		ECEA1CKA470L	E.CAPACITOR 16V 47U	3	
C2065-67		ECUM1C104ZFV	C.CAPACITOR CH 16V 0.1U	3	
C2068		ECEA1HKKR47	E.CAPACITOR 50V 0.47U	1	
C2071		ECUM1C333ZFV	C.CAPACITOR CH 16V 0.033U	1	
C2072,73		ECUM1C474ZFM	C.CAPACITOR CH 16V 0.47U	2	
C2078		ECUM1C473ZFV	C.CAPACITOR CH 16V 0.047U	1	
C2081		ECEA0JKA470	E.CAPACITOR 6.3V 47U	1	
C3801		ECEA1CKA101	E.CAPACITOR 16V 100U	1	
C3802,03		ECUM1H103ZFV	C.CAPACITOR CH 50V 0.01U	2	
C3805		ECUM1H103ZFV	C.CAPACITOR CH 50V 0.01U	1	
C3807		ECUM1H103KBN	C.CAPACITOR CH 50V 0.01U	1	
C3840		ECUM1H331KBV	C.CAPACITOR CH 50V 330P	1	
C3841		ECEA0JKA221	E.CAPACITOR 6.3V 220U	1	
C3842-44		ECUM1H103ZFV	C.CAPACITOR CH 50V 0.01U	3	
C3847		ECUM1H471KBV	C.CAPACITOR CH 50V 470P	1	
C4001		ECQP1222JZ	P.CAPACITOR 100V 2200P	1	
C4002		ECRHC120N11	.CAPACITOR V	1	
C4003		ECUM1H562KBV	C.CAPACITOR CH 50V 5600P	1	
C4004		ECUM1H472KBV	C.CAPACITOR CH 50V 4700P	1	
C4005		ECUM1H122KBV	C.CAPACITOR CH 50V 1200P	1	
C4007		ECSF1VE105GD	T.CAPACITOR 35V 1U	1	
C4008		ECUM1E333KBN	C.CAPACITOR CH 25V 0.033U	1	
C4009		ECEA1AKA330	E.CAPACITOR 10V 33U	1	
C4011		ECUM1E822KBV	C.CAPACITOR CH 25V 8200P	1	
C4012		ECEA1CKA220	E.CAPACITOR 16V 22U	1	
C4013		ECEA1HSN010	E.CAPACITOR 50V 1U	1	
C4014		ECUM1H182KBV	C.CAPACITOR CH 50V 1800P	1	
C4015		ECEA0JKA470	E.CAPACITOR 6.3V 47U	1	
C4016		ECEA1CKA470L	E.CAPACITOR 16V 47U	1	
C4017		ECEA1CKA220	E.CAPACITOR 16V 22U	1	
C4018		ECEA1AKA221	E.CAPACITOR 10V 220U	1	
C4019		ECEA1HKK010	E.CAPACITOR 50V 1U	1	
C4021		ECUM1E333KBN	C.CAPACITOR CH 25V 0.033U	1	

Ref.No.		Part No.	Part Name & Description	Pcs	Remarks
C4022		ECEA1HKK010	E.CAPACITOR 50V 1U	1	
C4024-26		ECEA1CKA220	E.CAPACITOR 16V 22U	3	
C4027		ECUX1H682KBN	C.CAPACITOR CH 50V 6800P	1	
C4038		ECEA1CKA470L	E.CAPACITOR 16V 47U	1	
C4040		ECUM1H151JV	C.CAPACITOR CH 50V 150P	1	
C4803		ECEA1AKA330	E.CAPACITOR 10V 33U	1	
C4805		ECEA1AKN100	E.CAPACITOR 10V 10U	1	
C4807		ECEA0JKA101	E.CAPACITOR 6.3V 100U	1	
C4809		ECEA1EKK2R2	E.CAPACITOR 25V 2.2U	1	
C4813		ECEA1CKK100	E.CAPACITOR 16V 10U	1	
C4814		ECEA1CKA101	E.CAPACITOR 16V 100U	1	
C4815		ECUM1H102KBV	C.CAPACITOR CH 50V 1000P	1	
C4816		ECUM1H330JCV	C.CAPACITOR CH 50V 33P	1	
C4817		ECEA1AKA220L	E.CAPACITOR 10V 22U	1	
C4818		ECEA1CKA101	E.CAPACITOR 16V 100U	1	
C4835		ECEA0JKA221	E.CAPACITOR 6.3V 220U	1	
C4837		ECEA1CKA220	E.CAPACITOR 16V 22U	1	
C4839		ECEA1CKA470L	E.CAPACITOR 16V 47U	1	
C4840		ECEA0JKA101	E.CAPACITOR 6.3V 100U	1	
C4841		ECEA1EKN3R3	E.CAPACITOR 25V 3.3U	1	
C4845		ECEA1EKK3R3	E.CAPACITOR 25V 3.3U	1	
C4850		ECUM1H560JCV	C.CAPACITOR CH 50V 56P	1	
C4852		ECEA1HKK010	E.CAPACITOR 50V 1U	1	
C4855		ECEA0JKA101	E.CAPACITOR 6.3V 100U	1	
C4856		ECEA1CKA101	E.CAPACITOR 16V 100U	1	
C4858		ECEA0JKA101	E.CAPACITOR 6.3V 100U	1	
C4859		ECEA1EKK3R3	E.CAPACITOR 25V 3.3U	1	
C4860		ECEA1CKA470L	E.CAPACITOR 16V 47U	1	
C4862		ECEA0JKA221	E.CAPACITOR 6.3V 220U	1	
C4864		ECUM1H151JV	C.CAPACITOR CH 50V 150P	1	
C5001		ECUM1E103KBV	C.CAPACITOR CH 25V 0.01U	1	
C5002		ECUM1H103KBN	C.CAPACITOR CH 50V 0.01U	1	
C5003		ECUM1E103KBV	C.CAPACITOR CH 25V 0.01U	1	
C5004		ECUM1H103KBN	C.CAPACITOR CH 50V 0.01U	1	
C5005		ECUM1C104ZFV	C.CAPACITOR CH 16V 0.1U	1	
C5006		ECEA1CKA470L	E.CAPACITOR 16V 47U	1	
C5007		ECUM1E103KBV	C.CAPACITOR CH 25V 0.01U	1	
C5008		ECEA0JKS470	E.CAPACITOR 6.3V 47U	1	
C5009		ECUM1E103KBV	C.CAPACITOR CH 25V 0.01U	1	
C5010		ECUM1H104ZFN	C.CAPACITOR CH 50V 0.1U	1	
C5011		ECUM1E103KBV	C.CAPACITOR CH 25V 0.01U	1	
C5013		ECUM1C105ZFM	C.CAPACITOR CH 16V 1U	1	
C5014		ECUM1E103KBV	C.CAPACITOR CH 25V 0.01U	1	
C5015		ECUM1H101JCV	C.CAPACITOR CH 50V 100P	1	
C5016,17		ECUM1E103KBV	C.CAPACITOR CH 25V 0.01U	2	
C5018		ECUM1H101JCV	C.CAPACITOR CH 50V 100P	1	
C5019		ECUM1E103KBV	C.CAPACITOR CH 25V 0.01U	1	
C5020		ECUM1C105ZFM	C.CAPACITOR CH 16V 1U	1	
C5023		ECUM1C105ZFM	C.CAPACITOR CH 16V 1U	1	
C5025		ECUM1E103KBV	C.CAPACITOR CH 25V 0.01U	1	
C5026,27		ECUM1H101JCV	C.CAPACITOR CH 50V 100P	2	
C5028-30		ECUM1E103KBV	C.CAPACITOR CH 25V 0.01U	3	
C5031		ECUM1C105ZFM	C.CAPACITOR CH 16V 1U	1	
C5033		ECEA0JKA470	E.CAPACITOR 6.3V 47U	1	
C5034-36		ECUM1E103KBV	C.CAPACITOR CH 25V 0.01U	3	
C5037		ECUM1C104ZFV	C.CAPACITOR CH 16V 0.1U	1	
C5038		ECUM1H151JV	C.CAPACITOR CH 50V 150P	1	
C5039		ECUM1H121JCV	C.CAPACITOR CH 50V 120P	1	
C5040		ECUM1H390JCV	C.CAPACITOR CH 50V 39P	1	
C5041-44		ECUM1H472ZFV	C.CAPACITOR CH 50V 4700P	4	
C6001		ECUM1C104ZFV	C.CAPACITOR CH 16V 0.1U	1	
C6002		ECEA1CKA470L	E.CAPACITOR 16V 47U	1	
C6003		ECEA1EKA100	E.CAPACITOR 25V 10U	1	
C6004		ECEA1AKA330	E.CAPACITOR 10V 33U	1	
C6005		ECUM1C104ZFV	C.CAPACITOR CH 16V 0.1U	1	
C6006,07		ECUM1H103ZFV	C.CAPACITOR CH 50V 0.01U	2	
C6008		ECEA1CKA470L	E.CAPACITOR 16V 47U	1	
C6009		ECUM1C104ZFV	C.CAPACITOR CH 16V 0.1U	1	
C6010		ECUM1H330JCV	C.CAPACITOR CH 50V 33P	1	
C6011		ECRJA030E12	V.CAPACITOR	1	
C6014		ECUM1C104ZFV	C.CAPACITOR CH 16V 0.1U	1	
C6015		ECEA1CKA470L	E.CAPACITOR 16V 47U	1	
C6016-18		ECUM1C104ZFV	C.CAPACITOR CH 16V 0.1U	3	
C6019		ECEA1EKA220	E.CAPACITOR 25V 22U	1	
C6020		ECUM1C104ZFV	C.CAPACITOR CH 16V 0.1U	1	

Ref.No.		Part No.	Part Name & Description	Pcs	Remarks
C6021-23		ECUM1H103ZFV	C.CAPACITOR CH 50V 0.01U	3	
C6024		ECUM1H562ZFV	C.CAPACITOR CH 50V 5600P	1	
C6025		ECUM1H104ZFN	C.CAPACITOR CH 50V 0.1U	1	
C6026		ECUM1C104ZFV	C.CAPACITOR CH 16V 0.1U	1	
C6027		ECEA1EKA100	E.CAPACITOR 25V 10U	1	
C6028		ECEA1HKK010	E.CAPACITOR 50V 1U	1	
C6029		ECUM1H331KBV	C.CAPACITOR CH 50V 330P	1	
C6030		ECEA1EGE221	E.CAPACITOR 25V 220U	1	
C6031		ECUM1H151JV	C.CAPACITOR CH 50V 150P	1	
			DIODES		
D1001,02		MA141K	DIODE	2	
D1003		MA159A	DIODE	1	
D1004		MA3075H	DIODE	1	
D1005,06		MA141K	DIODE	2	
D2001-03		MA143	DIODE	3	
D2005		MA121	DIODE	1	
D2012,13		MA141K	DIODE	2	
D3801,02		MA141WK	DIODE	2	
D3803		MA3056	DIODE	1	
D4801		MA141K	DIODE	1	
D4802		MA141WK	DIODE	1	
D4803,04		MA143	DIODE	2	
D4805		MA141K	DIODE	1	
D4806		MA141WA	DIODE	1	
D4807		MA143	DIODE	1	
D4808		MA141WA	DIODE	1	
D6001		MA141WA	DIODE	1	
D6002		MA141K	DIODE	1	
D6003		MA141WA	DIODE	1	
D6004		MA141WK	DIODE	1	
D6005		MA141WA	DIODE	1	
D6009		MA141WA	DIODE	1	
D6010,11		MA141K	DIODE	2	
D6012		MA141WK	DIODE	1	
D6015		MA141WA	DIODE	1	
D6017		MA143	DIODE	1	
D6018		MA141WK	DIODE	1	
D6019		MA141K	DIODE	1	
D6021-25		MA141K	DIODE	5	
D6026		MA3056	DIODE	1	
D6029		MA141K	DIODE	1	
			ICS		
IC1001		BA6149LS	IC	1	
IC1002		UN102	TRANSISTOR-RESISTOR	1	
IC1003		AN6562S	IC	1	
IC1004		AN6914S	IC	1	
IC1005		AN1358S	IC	1	
IC2001		MN67461VDJF	IC	1	
IC2002		AN3798NS	IC	1	
IC2005		AN3841SR	IC	1	
IC2006		TA8402F	IC	1	
IC4001		UPC1513G	IC	1	
IC4002		UPC2300G	IC	1	
IC4801		BA3308	IC	1	
IC4804		MN4053BS	IC	1	
IC4805		NJM3415M	IC	1	
IC5001		AN3346FBP	IC	1	
IC6001		UPD4094BG	IC	1	
IC6002		M50963MS2AC	IC	1	
IC6003		S3500A2	IC	1	
IC6004		UPD6145G617A	IC	1	
IC6005		M54543AL	IC	1	
IC6006		UPD4094BG	IC	1	
IC6007		MN12821Q	IC	1	
IC6008		UPD4094BG	IC	1	
			COILS		
L1001		VLQ0128	COIL 47UH	1	
L1002		ELC08D038	COIL 180UH	1	
L1003		ELC06D005	COIL	1	

Ref.No.		Part No.	Part Name & Description	Pcs	Remarks
L1004		VLQ0128	COIL 47UH	1	
L1005		ELC08D050	COIL	1	
L1006		VLQ0128	COIL 47UH	1	
L1007		ELC08D025	COIL 600UH	1	
L1008		VLQ0129	COIL 300UH	1	
L1011,12		VLQEL05T221K	COIL 200UH	2	
L1014		VLQEL05T101K	COIL H	1	
L3801		VLQEL05T101K	COIL H	1	
L4001		VLQEL05T221K	COIL 200UH	1	
L4002		VLQEL07F822J	COIL 8200UH	1	
L4003		VLQEL07R153J	COIL 15H	1	
L5001-03		VLQEL05T101K	COIL H	3	
L5004		VLQEL05T100K	COIL H	1	
L5005		VLQEL05F120T	COIL 12UH	1	
L6001		VLQEL05T101K	COIL H	1	
L6002		VLQEL04F101K	COIL H	1	
L6003		VLQ0163F390	COIL 39UH	1	
			CONNECTORS		
P1001		VJP1231T	CONNECTOR(MALE) 4P	1	
P1003		VJP1229T	CONNECTOR(MALE) 2P	1	
P2001		VJS2120	CONNECTOR	1	
P2002		VJP1923T	CONNECTOR	1	
P3801		VJP2237	CONNECTOR (MALE)	1	
P3802		VJS2119	CONNECTOR	1	
P3803		VJP1598T	CONNECTOR(MALE) 5P	1	
P3804		VJP1603T	CONNECTOR(MALE) 10P	1	
P3805		VJP1595T	CONNECTOR(MALE) 2P	1	
P4001		VJP1597T	CONNECTOR(MALE) 4P	1	
P4002		VJP1600T	CONNECTOR(MALE) 7P	1	
P4004		VJP1595T	CONNECTOR(MALE) 2P	1	
P4801		VJP1602T	CONNECTOR	1	
P5001		VJS2117	CONNECTOR	1	
P6002		VJP1603T	CONNECTOR(MALE) 10P	1	
P6003		VJS2107	CONNECTOR	1	
P6004		VJP1229T	CONNECTOR(MALE) 2P	1	
P6005		VJP1595T	CONNECTOR(MALE) 2P	1	
P6006		VJP1596T	CONNECTOR(MALE) 3P	1	
P6007		VJP1602T	CONNECTOR	1	
P6010		VJP1596T	CONNECTOR(MALE) 3P	1	
P6011		VJP2523	CONNECTOR (MALE)	1	
P6012		VJP1229T	CONNECTOR(MALE) 2P	1	
P6013		VJP1595R	CONNECTOR(MALE) 2P	1	
P6014		VJP1600T	CONNECTOR(MALE) 7P	1	
P6016		VJP1595T	CONNECTOR(MALE) 2P	1	
			TRANSISTORS		
Q1001		2SB1218	TRANSISTOR	1	
Q1002		2SB956	TRANSISTOR	1	
Q1003		2SD1526	TRANSISTOR	1	
Q1004		2SD1119	TRANSISTOR	1	
Q1005		2SD602	TRANSISTOR CHIP	1	(Q,R,S)
Q1006		2SB970X	TRANSISTOR	1	
Q1007		2SD1328X	TRANSISTOR	1	
Q1008		2SD602	TRANSISTOR CHIP	1	(Q,R,S)
Q1011		2SB1218	TRANSISTOR	1	
Q2001-03		2SB956	TRANSISTOR	3	
Q3801,02		2SB970X	TRANSISTOR	2	
Q3803,04		FMS1	TRANSISTOR-RESISTOR	2	
Q3805		2SC3938	TRANSISTOR	1	
Q3806		2SD1819	TRANSISTOR	1	
Q3808		2SB1218	TRANSISTOR	1	
Q4001		2SD1820	TRANSISTOR	1	
Q4005		2SB970X	TRANSISTOR	1	
Q4802		2SA1531	TRANSISTOR	1	
Q4804,05		2SD1819	TRANSISTOR	2	
Q4808		2SD1328	TRANSISTOR CHIP	1	
Q4810		2SD1328X	TRANSISTOR	1	
Q5001		2SB1218	TRANSISTOR	1	
Q5002		2SA812	TRANSISTOR	1	
Q5003		2SA1175	TRANSISTOR	1	
Q5004,05		XN4504	TRANSISTOR-RESISTOR	2	
Q6001		2SB1218	TRANSISTOR	1	

Ref.No.		Part No.	Part Name & Description	Pcs	Remarks
Q6002		2SB970X	TRANSISTOR	1	
Q6003		2SD1819	TRANSISTOR	1	
Q6004,05		2SD1820	TRANSISTOR	2	
Q6006		2SD1819	TRANSISTOR	1	
Q6007		FMW1	TRANSISTOR-RESISTOR	1	
			COMBINATION PARTS		
QR1001		FMG2	TRANSISTOR-RESISTOR	1	
QR1002		GA1L4M	TRANSISTOR-RESISTOR	1	
QR2005		GN1F4Z	TRANSISTOR-RESISTOR	1	
QR3801		GN1F4M	TRANSISTOR-RESISTOR	1	
QR3802		GA1F4Z	TRANSISTOR-RESISTOR	1	
QR3803		GN1F4M	TRANSISTOR-RESISTOR	1	
QR3804		GA1F4Z	TRANSISTOR-RESISTOR	1	
QR3805		FMG1	TRANSISTOR-RESISTOR	1	
QR3806		GA1L4M	TRANSISTOR-RESISTOR	1	
QR3807		GA1F4M	TRANSISTOR-RESISTOR	1	
QR3808		FMS1	TRANSISTOR-RESISTOR	1	
QR3809		GA1F4M	TRANSISTOR-RESISTOR	1	
QR4002		GA1F4M	TRANSISTOR-RESISTOR	1	
QR4003,04		GN1L3Z	TRANSISTOR-RESISTOR	2	
QR4803,04		GA1L4M	TRANSISTOR-RESISTOR	2	
QR4805		GN1L4M	TRANSISTOR-RESISTOR	1	
QR4806		GN1L4Z	TRANSISTOR-RESISTOR	1	
QR4807		GN1L4M	TRANSISTOR-RESISTOR	1	
QR4808		GA1L4M	TRANSISTOR-RESISTOR	1	
QR5001		GA1A4Z	TRANSISTOR-RESISTOR	1	
QR5002,03		FMG1	TRANSISTOR-RESISTOR	2	
QR6001		IMD2	TRANSISTOR-RESISTOR	1	
QR6002		GA1F4M	TRANSISTOR-RESISTOR	1	
QR6003		XN1217	TRANSISTOR-RESISTOR	1	
QR6004		GA1L4M	TRANSISTOR-RESISTOR	1	
QR6005		GA1F4Z	TRANSISTOR-RESISTOR	1	
QR6006		XN1217	TRANSISTOR-RESISTOR	1	
QR6009		GA1F4Z	TRANSISTOR-RESISTOR	1	
QR6010		GA1L4L	TRANSISTOR-RESISTOR	1	
QR6011		XN1217	TRANSISTOR-RESISTOR	1	
QR6014		XN1217	TRANSISTOR-RESISTOR	1	
QR6017		GN1A4M	TRANSISTOR-RESISTOR	1	
QR6019		FMA1	TRANSISTOR-RESISTOR	1	
QR6020		FMG2	TRANSISTOR-RESISTOR	1	
QR6022		GN1L4M	TRANSISTOR-RESISTOR	1	
QR6027		GA1L4M	TRANSISTOR-RESISTOR	1	
QR6029,30		GA1L4M	TRANSISTOR-RESISTOR	2	
QR6031-33		FMA2	TRANSISTOR-RESISTOR	3	
QR6034		GN1L4M	TRANSISTOR-RESISTOR	1	
QR6035		UN4213	TRANSISTOR-RESISTOR	1	
			RESISTORS		
R1001		ERJ3GEYJ563	M.RESISTOR CH 3W 56K	1	
R1002		ERJ3GEYJ222	M.RESISTOR CH 3W 2.2K	1	
R1003		ERJ3GEYJ103	M.RESISTOR CH 3W 10K	1	
R1004		ERJ3GEYJ222	M.RESISTOR CH 3W 2.2K	1	
R1005		ERJ3GEYJ103	M.RESISTOR CH 3W 10K	1	
R1006		ERJ3GEYJ472	M.RESISTOR CH 3W 4.7K	1	
R1007		ERJ3GEYJ103	M.RESISTOR CH 3W 10K	1	
R1008		ERJ3GEYJ334	M.RESISTOR CH 3W 330K	1	
R1009		ERJ3GEYJ154	M.RESISTOR CH 3W 150K	1	
R1010		ERJ3GEYG562	M.RESISTOR CH 3W 5.6K	1	
R1011		ERJ3GEYG512	M.RESISTOR CH 3W 5.1K	1	
R1012,13		ERJ8GCYJ122	M.RESISTOR CH 1/8W 1.2K	2	
R1014,15		ERJ8GCYJ102	M.RESISTOR CH 1/8W 1K	2	
R1016,17		ERJ3GEYG512	M.RESISTOR CH 3W 5.1K	2	
R1018		ERJ8GCYJ122	M.RESISTOR CH 1/8W 1.2K	1	
R1019		ERJ8GCYJ821	M.RESISTOR CH 1/8W 820	1	
R1020,21		ERJ3GEYJ183	M.RESISTOR CH 3W 18K	2	
R1022,23		ERJ3GEYJ681	M.RESISTOR CH 3W 680	2	
R1024		ERJ3GEYJ153	M.RESISTOR CH 3W 15K	1	
R1025		ERJ3GEYJ562	M.RESISTOR CH 3W 5.6K	1	
R1026-31		ERJ3GEYJ391	M.RESISTOR CH 3W 390	6	
R1032		ERJ3GEYJ821	M.RESISTOR CH 3W 820	1	
R1033		ERJ3GEYJ102	M.RESISTOR CH 3W 1K	1	
R1034		ERJ3GEYJ562	M.RESISTOR CH 3W 5.6K	1	

Ref.No.		Part No.	Part Name & Description	Pcs	Remarks
R1035		ERJ3GEYJ105	M.RESISTOR CH 3W 1M	1	
R1036		ERJ3GEYJ222	M.RESISTOR CH 3W 2.2K	1	
R1037		ERJ3GEYJ272	M.RESISTOR CH 3W 2.7K	1	
R1038		ERJ3GEYJ472	M.RESISTOR CH 3W 4.7K	1	
R1039		ERJ3GEYJ272	M.RESISTOR CH 3W 2.7K	1	
R1041		ERJ3GEYJ330	M.RESISTOR CH 3W 33	1	
R1042		ERJ3GEYJ683	M.RESISTOR CH 3W 68K	1	
R1043		ERJ3GEYJ123	M.RESISTOR CH 3W 12K	1	
R1044		ERJ8GCYJ560	M.RESISTOR CH 1/8W 56	1	
R1045		ERJ3GEYJ104	M.RESISTOR CH 3W 100K	1	
R1046		ERJ3GEYJ684	M.RESISTOR CH 3W 680K	1	
R1047		ERJ3GEYJ104	M.RESISTOR CH 3W 100K	1	
R1048		ERJ3GEYJ102	M.RESISTOR CH 3W 1K	1	
R1049,50		ERDS2TJ332T	.RESISTOR CH 2W 3.3K	2	
R1051		ERJ3GEYJ681	M.RESISTOR CH 3W 680	1	
R1052-54		ERJ3GEYJ105	M.RESISTOR CH 3W 1M	3	
R1055		ERJ3GEYJ474	M.RESISTOR CH 3W 470K	1	
R1056		ERJ3GEYJ105	M.RESISTOR CH 3W 1M	1	
R1057		ERJ3GEYJ184	M.RESISTOR CH 3W 180K	1	
R1058		ERJ3GEYJ681	M.RESISTOR CH 3W 680	1	
R1071		VSF0059	FUSE	1	
R1072-75		VSF0015A10	FUSE	4	
R1076		ERJ3GEYJ103	M.RESISTOR CH 3W 10K	1	
R1077		ERJ3GEYJ183	M.RESISTOR CH 3W 18K	1	
R2001,02		ERJ3GEYJ102	M.RESISTOR CH 3W 1K	2	
R2003		ERJ3GEYJ272	M.RESISTOR CH 3W 2.7K	1	
R2004		ERJ3GEYJ333	M.RESISTOR CH 3W 33K	1	
R2005		ERJ3GEYJ473	M.RESISTOR CH 3W 47K	1	
R2006		ERJ3GEYJ104	M.RESISTOR CH 3W 100K	1	
R2007		ERJ3GEYJ154	M.RESISTOR CH 3W 150K	1	
R2009		ERJ3GEYJ154	M.RESISTOR CH 3W 150K	1	
R2010		ERJ3GEYJ822	M.RESISTOR CH 3W 8.2K	1	
R2011		ERJ3GEYJ563	M.RESISTOR CH 3W 56K	1	
R2012		ERJ3GEYJ274	M.RESISTOR CH 3W 270K	1	
R2013		ERJ3GEYJ154	M.RESISTOR CH 3W 150K	1	
R2014		ERJ3GEYJ103	M.RESISTOR CH 3W 10K	1	
R2015		ERJ3GEYJ123	M.RESISTOR CH 3W 12K	1	
R2017		ERJ3GEYJ103	M.RESISTOR CH 3W 10K	1	
R2018		ERJ3GEYJ102	M.RESISTOR CH 3W 1K	1	
R2019		ERJ3GEYJ105	M.RESISTOR CH 3W 1M	1	
R2020		ERJ3GEYJ222	M.RESISTOR CH 3W 2.2K	1	
R2021		ERJ3GEY0R00	M.RESISTOR CH 3W 0.00	1	
R2022		ERJ3GEYJ271	M.RESISTOR CH 3W 270	1	
R2025		ERJ3GEYJ393	M.RESISTOR CH 3W 39K	1	
R2028		ERJ3GEYJ105	M.RESISTOR CH 3W 1M	1	
R2029		ERJ3GEYJ153	M.RESISTOR CH 3W 15K	1	
R2030		ERJ3GEYJ273	M.RESISTOR CH 3W 27K	1	
R2031		ERJ3GEYJ333	M.RESISTOR CH 3W 33K	1	
R2032		ERJ3GEYJ274	M.RESISTOR CH 3W 270K	1	
R2034		ERJ3GEYJ272	M.RESISTOR CH 3W 2.7K	1	
R2038		ERDS2TJR47	.RESISTOR W	1	
R2040		ERJ3GEYJ102	M.RESISTOR CH 3W 1K	1	
R2041		ERJ3GEYJ332	M.RESISTOR CH 3W 3.3K	1	
R2042		ERJ3GEYJ563	M.RESISTOR CH 3W 56K	1	
R2043		ERJ3GEYJ221	M.RESISTOR CH 3W 220	1	
R2044		ERJ3GEYJ820	M.RESISTOR CH 3W 82	1	
R2045		ERJ8GCYJ2R2	M.RESISTOR CH 1/8W 2.2	1	
R2046,47		ERJ8GCYJ1R8	M.RESISTOR CH 1/8W 1.8	2	
R2048		ERJ3GEYJ153	M.RESISTOR CH 3W 15K	1	
R2049-51		ERJ3GEYJ103	M.RESISTOR CH 3W 10K	3	
R2053,54		ERJ3GEYJ682	M.RESISTOR CH 3W 6.8K	2	
R2060		ERJ3GEYJ334	M.RESISTOR CH 3W 330K	1	
R2062		ERJ3GEYJ102	M.RESISTOR CH 3W 1K	1	
R2066		ERJ3GEYJ221	M.RESISTOR CH 3W 220	1	
R2067-69		ERJ6GMYJ150	M.RESISTOR CH 1/10W 15	3	
R2070-72		ERJ3GEYJ104	M.RESISTOR CH 3W 100K	3	
R2077		ERJ3GEYJ392	M.RESISTOR CH 3W 3.9K	1	
R2079		ERJ3GEYJ152	M.RESISTOR CH 3W 1.5K	1	
R2080		ERJ3GEY0R00	M.RESISTOR CH 3W 0.00	1	
R2085,86		ERJ3GEYJ104	M.RESISTOR CH 3W 100K	2	
R2087		ERJ3GEY0R00	M.RESISTOR CH 3W 0.00	1	
R2090		ERJ3GEYJ102	M.RESISTOR CH 3W 1K	1	
R3801		ERJ3GEYJ471	M.RESISTOR CH 3W 470	1	
R3802		ERJ3GEYJ681	M.RESISTOR CH 3W 680	1	
R3803-05		ERJ3GEYJ472	M.RESISTOR CH 3W 4.7K	3	

Ref.No.		Part No.	Part Name & Description	Pcs	Remarks
R3806		ERJ3GEYJ102	M.RESISTOR CH 3W 1K	1	
R3808		ERJ3GEYJ272	M.RESISTOR CH 3W 2.7K	1	
R3811,12		ERJ3GEYJ472	M.RESISTOR CH 3W 4.7K	2	
R3813		ERJ3GEYJ153	M.RESISTOR CH 3W 15K	1	
R3814		ERJ3GEYJ103	M.RESISTOR CH 3W 10K	1	
R3816		ERJ3GEYJ223	M.RESISTOR CH 3W 22K	1	
R3830		ERJ3GEYJ223	M.RESISTOR CH 3W 22K	1	
R3834		ERJ3GEYG393	M.RESISTOR CH 3W 39K	1	
R3837		ERJ3GEYJ103	M.RESISTOR CH 3W 10K	1	
R3841-44		ERJ3GEYJ102	M.RESISTOR CH 3W 1K	4	
R3845		ERJ3GEYJ123	M.RESISTOR CH 3W 12K	1	
R3846		ERJ3GEYJ101	M.RESISTOR CH 3W 100	1	
R3848		ERJ3GEYJ681	M.RESISTOR CH 3W 680	1	
R3851		ERJ3GEYJ102	M.RESISTOR CH 3W 1K	1	
R3858		ERJ3GEYG103	M.RESISTOR CH 3W 10K	1	
R3876		ERJ3GEYJ332	M.RESISTOR CH 3W 3.3K	1	
R3885		ERJ3GEYJ223	M.RESISTOR CH 3W 22K	1	
R3886		ERJ3GEYJ103	M.RESISTOR CH 3W 10K	1	
R4001		ERJ3GEYJ100	M.RESISTOR CH 3W 10	1	
R4002		ERJ3GEYJ223	M.RESISTOR CH 3W 22K	1	
R4003		ERJ3GEYJ103	M.RESISTOR CH 3W 10K	1	
R4004		ERJ3GEYJ273	M.RESISTOR CH 3W 27K	1	
R4005		ERJ3GEYJ151	M.RESISTOR CH 3W 150	1	
R4006		ERJ3GEYJ184	M.RESISTOR CH 3W 180K	1	
R4007		ERJ3GEYJ332	M.RESISTOR CH 3W 3.3K	1	
R4009		ERJ3GEYJ122	M.RESISTOR CH 3W 1.2K	1	
R4010		ERJ3GEYJ472	M.RESISTOR CH 3W 4.7K	1	
R4011		ERJ3GEYJ331	M.RESISTOR CH 3W 330	1	
R4012		ERJ3GEYJ472	M.RESISTOR CH 3W 4.7K	1	
R4013		ERJ3GEYJ153	M.RESISTOR CH 3W 15K	1	
R4014		ERJ3GEYJ122	M.RESISTOR CH 3W 1.2K	1	
R4016		ERJ3GEYJ181	M.RESISTOR CH 3W 180	1	
R4018		ERJ3GEYJ105	M.RESISTOR CH 3W 1M	1	
R4027		ERJ3GEYJ561	M.RESISTOR CH 3W 560	1	
R4044		ERJ3GEYJ104	M.RESISTOR CH 3W 100K	1	
R4049		ERJ3GEYJ103	M.RESISTOR CH 3W 10K	1	
R4052		ERJ3GEYJ102	M.RESISTOR CH 3W 1K	1	
R4053		ERJ3GEYJ562	M.RESISTOR CH 3W 5.6K	1	
R4054		ERJ3GEYJ821	M.RESISTOR CH 3W 820	1	
R4055,56		ERJ3GEYJ102	M.RESISTOR CH 3W 1K	2	
R4058,59		ERJ3GEY0R00	M.RESISTOR CH 3W 0.00	2	
R4802		ERJ3GEYJ473	M.RESISTOR CH 3W 47K	1	
R4804		ERJ3GEYJ104	M.RESISTOR CH 3W 100K	1	
R4806		ERJ3GEYJ104	M.RESISTOR CH 3W 100K	1	
R4808		ERJ3GEYJ473	M.RESISTOR CH 3W 47K	1	
R4810		ERJ3GEYJ122	M.RESISTOR CH 3W 1.2K	1	
R4812		ERJ3GEYJ221	M.RESISTOR CH 3W 220	1	
R4814		ERJ3GEYJ333	M.RESISTOR CH 3W 33K	1	
R4816		ERJ3GEYJ222	M.RESISTOR CH 3W 2.2K	1	
R4817		ERJ3GEY0R00	M.RESISTOR CH 3W 0.00	1	
R4818		ERJ3GEYJ332	M.RESISTOR CH 3W 3.3K	1	
R4819		ERJ3GEY0R00	M.RESISTOR CH 3W 0.00	1	
R4820		ERJ3GEYJ103	M.RESISTOR CH 3W 10K	1	
R4824		ERJ3GEYJ334	M.RESISTOR CH 3W 330K	1	
R4825		ERJ8GCYJ221	M.RESISTOR CH 1/8W 220	1	
R4826		ERJ3GEY0R00	M.RESISTOR CH 3W 0.00	1	
R4827		ERJ3GEYJ392	M.RESISTOR CH 3W 39K	1	
R4828		ERJ3GEYJ221	M.RESISTOR CH 3W 220	1	
R4829		ERJ3GEYJ103	M.RESISTOR CH 3W 10K	1	
R4839		ERJ3GEYJ221	M.RESISTOR CH 3W 220	1	
R4843		ERJ3GEYJ472	M.RESISTOR CH 3W 4.7	1	
R4845		ERJ3GEYJ102	M.RESISTOR CH 3W 1K	1	
R4846		ERJ3GEYJ224	M.RESISTOR CH 3W 220K	1	
R4847		ERJ3GEYJ183	M.RESISTOR CH 3W 18K	1	
R4848		ERJ8GCYJ221	M.RESISTOR CH 1/8W 220	1	
R4849		ERJ3GEYJ224	M.RESISTOR CH 3W 220K	1	
R4853		ERJ3GEYJ224	M.RESISTOR CH 3W 220K	1	
R4855,56		ERJ3GEYJ562	M.RESISTOR CH 3W 5.6K	2	
R4857		ERJ3GEYJ123	M.RESISTOR CH 3W 12K	1	
R4858		ERJ3GEYJ274	M.RESISTOR CH 3W 270K	1	
R4859		ERJ3GEYJ472	M.RESISTOR CH 3W 4.7K	1	
R4862		ERJ3GEYJ102	M.RESISTOR CH 3W 1K	1	
R4863,64		ERJ3GEYJ224	M.RESISTOR CH 3W 220K	2	
R4865,66		ERJ3GEYJ562	M.RESISTOR CH 3W 5.6K	2	
R4868		ERJ8GCYJ121	M.RESISTOR CH 1/8W 120	1	

Ref.No.		Part No.	Part Name & Description	Pcs	Remarks
R4870		ERJ3GEYJ822	M.RESISTOR CH 3W 8.2K	1	
R4872		ERJ3GEYJ562	M.RESISTOR CH 3W 5.6K	1	
R4873		ERJ3GEYJ124	M.RESISTOR CH 3W 120K	1	
R4876		ERJ8GCYJ101	M.RESISTOR CH 1/8W 100	1	
R4882		ERJ3GEYJ102	M.RESISTOR CH 3W 1K	1	
R4883		ERJ3GEYJ124	M.RESISTOR CH 3W 120K	1	
R4885		ERJ8GCYJ560	M.RESISTOR CH 1/8W 56	1	
R4886		ERJ3GEYJ122	M.RESISTOR CH 3W 1.2K	1	
R4887		ERJ3GEYJ471	M.RESISTOR CH 3W 470	1	
R4890,91		ERJ3GEY0R00	M.RESISTOR CH 3W 0.00	2	
R4892,93		ERJ3GEYJ473	M.RESISTOR CH 3W 47K	2	
R5001		ERJ3GEYJ152	M.RESISTOR CH 3W 1.5K	1	
R5002		ERJ3GEYJ103	M.RESISTOR CH 3W 10K	1	
R5003-05		ERJ3GEYJ102	M.RESISTOR CH 3W 1K	3	
R5006		ERJ3GEYJ471	M.RESISTOR CH 3W 470	1	
R5007		ERJ3GEYJ681	M.RESISTOR CH 3W 680	1	
R5008		ERJ3GEY0R00	M.RESISTOR CH 3W 0.00	1	
R5009		ERJ3GEYJ103	M.RESISTOR CH 3W 10K	1	
R5010		ERJ3GEYJ222	M.RESISTOR CH 3W 2.2K	1	
R5011,12		ERJ3GEYJ100	M.RESISTOR CH 3W 10	2	
R5013,14		ERJ3GEYJ222	M.RESISTOR CH 3W 2.2K	2	
R5015,16		ERJ3GEYJ100	M.RESISTOR CH 3W 10	2	
R5017,18		ERJ3GEYJ681	M.RESISTOR CH 3W 680	2	
R5019		ERJ3GEYJ222	M.RESISTOR CH 3W 2.2K	1	
R5020		ERJ3GEYJ103	M.RESISTOR CH 3W 10K	1	
R5021-24		ERJ3GEYJ333	M.RESISTOR CH 3W 33K	4	
R5025		ERJ3GEYJ393	M.RESISTOR CH 3W 39K	1	
R5026		ERJ3GEYJ822	M.RESISTOR CH 3W 8.2K	1	
R5027		ERJ3GEYJ271	M.RESISTOR CH 3W 270	1	
R5028		ERJ3GEYJ391	M.RESISTOR CH 3W 390	1	
R5031-34		ERJ3GEYJ472	M.RESISTOR CH 3W 4.7K	4	
R5035-38		ERJ3GEYJ103	M.RESISTOR CH 3W 10K	4	
R5040		ERJ8GCYJ4R7	M.RESISTOR CH 1/8W 4.7	1	
R5041,42		ERJ3GEYJ681	M.RESISTOR CH 3W 680	2	
R5043		ERJ3GEYJ684	M.RESISTOR CH 3W 680K	1	
R5044		ERJ3GEYJ222	M.RESISTOR CH 3W 2.2K	1	
R6001		ERJ3GEYJ103	M.RESISTOR CH 3W 10K	1	
R6003		ERJ3GEYJ332	M.RESISTOR CH 3W 3.3K	1	
R6004		ERJ3GEYJ562	M.RESISTOR CH 3W 5.6K	1	
R6005-09		ERJ3GEYJ103	M.RESISTOR CH 3W 10K	5	
R6010		ERJ6GMYJ471	M.RESISTOR CH 1/10W 470	1	
R6011		ERJ3GEYJ103	M.RESISTOR CH 3W 10K	1	
R6015-23		ERJ3GEYJ103	M.RESISTOR CH 3W 10K	9	
R6025		ERJ6GMYJ391	M.RESISTOR CH 1/10W 390	1	
R6027		ERJ3GEYJ103	M.RESISTOR CH 3W 10K	1	
R6029		ERJ3GEYJ103	M.RESISTOR CH 3W 10K	1	
R6030,31		ERJ3GEYJ152	M.RESISTOR CH 3W 1.5K	2	
R6032-39		ERJ3GEYJ103	M.RESISTOR CH 3W 10K	8	
R6040		ERJ3GEYJ473	M.RESISTOR CH 3W 47K	1	
R6041		ERJ3GEYJ154	M.RESISTOR CH 3W 150K	1	
R6042		ERJ3GEYJ184	M.RESISTOR CH 3W 180K	1	
R6043-45		ERJ3GEYJ102	M.RESISTOR CH 3W 1K	3	
R6046		ERJ3GEYJ103	M.RESISTOR CH 3W 10K	1	
R6047-50		ERJ3GEYJ473	M.RESISTOR CH 3W 47K	4	
R6051		ERJ3GEYJ184	M.RESISTOR CH 3W 180K	1	
R6052		ERJ3GEYJ393	M.RESISTOR CH 3W 39K	1	
R6053		ERJ3GEYJ392	M.RESISTOR CH 3W 3.9K	1	
R6054-56		ERJ3GEYJ103	M.RESISTOR CH 3W 10K	3	
R6058		ERJ3GEYJ272	M.RESISTOR CH 3W 2.7K	1	
R6059,60		ERJ3GEYJ103	M.RESISTOR CH 3W 10K	2	
R6062		ERJ3GEYJ224	M.RESISTOR CH 3W 220K	1	
R6063		ERJ3GEYJ394	M.RESISTOR CH 3W 390K	1	
R6064		ERJ3GEYJ102	M.RESISTOR CH 3W 1K	1	
R6065		ERJ3GEYJ473	M.RESISTOR CH 3W 47K	1	
R6066		ERJ3GEYJ102	M.RESISTOR CH 3W 1K	1	
R6067		ERJ3GEYJ563	M.RESISTOR CH 3W 56K	1	
R6068		ERJ3GEYJ102	M.RESISTOR CH 3W 1K	1	
R6069		ERJ3GEYJ184	M.RESISTOR CH 3W 180K	1	
R6070		ERJ3GEYJ102	M.RESISTOR CH 3W 1K	1	
R6071		ERJ3GEYJ184	M.RESISTOR CH 3W 180K	1	
R6072		ERJ3GEYJ102	M.RESISTOR CH 3W 1K	1	
R6073		ERJ6GMYJ391	M.RESISTOR CH 1/10W 390	1	
R6074,75		ERJ8GCYJ331	M.RESISTOR CH 1/8W 330	2	
R6076		ERJ8GCYJ271	M.RESISTOR CH 1/8W 270	1	
R6077-79		ERJ3GEYJ103	M.RESISTOR CH 3W 10K	3	

Ref.No.		Part No.	Part Name & Description	Pcs	Remarks
R6080		ERJ6GMYJ391	M.RESISTOR CH 1/10W 390	1	
R6081		ERJ3GEYJ154	M.RESISTOR CH 3W 150K	1	
R6083		ERJ3GEYJ102	M.RESISTOR CH 3W 1K	1	
R6084-87		ERJ3GEYJ103	M.RESISTOR CH 3W 10K	4	
R6088		ERJ3GEYJ102	M.RESISTOR CH 3W 1K	1	
R6089		ERJ3GEYJ332	M.RESISTOR CH 3W 3.3K	1	
R6090		ERJ3GEYJ104	M.RESISTOR CH 3W 100K	1	
R6091		ERJ3GEYJ105	M.RESISTOR CH 3W 1M	1	
R6092		ERJ6GMYJ101	M.RESISTOR CH 1/10W 100	1	
R6093		ERJ3GEYJ102	M.RESISTOR CH 3W 1K	1	
R6094		ERJ8GCYJ101	M.RESISTOR CH 1/8W 100	1	
R6095,96		ERJ3GEYJ102	M.RESISTOR CH 3W 1K	2	
R6097		ERJ8GCYJ101	M.RESISTOR CH 1/8W 100	1	
R6098-03		ERJ6GMYJ391	M.RESISTOR CH 1/10W 390	6	
R6104		ERJ6GMYJ683	M.RESISTOR CH 1/10W 68K	1	
R6105		ERJ6GMYJ391	M.RESISTOR CH 1/10W 390	1	
R6106		ERJ3GEYJ103	M.RESISTOR CH 3W 10K	1	
R6107		ERJ3GEYJ472	M.RESISTOR CH 3W 4.7K	1	
R6108		ERJ3GEYJ683	M.RESISTOR CH 3W 68K	1	
R6109		ERJ3GEYJ273	M.RESISTOR CH 3W 27K	1	
R6110-12		ERJ3GEYJ103	M.RESISTOR CH 3W 10K	3	
R6113		ERJS2TJ223	.RESISTOR CH 2W 22K	1	
R6116		ERJ3GEYJ473	M.RESISTOR CH 3W 47K	1	
R6300		ERJ3GEYJ222	M.RESISTOR CH 3W 2.2K	1	
			SWITCH		
S6001		ESD142127	SWITCH	1	
			TRANSFORMER		
T1001		ELL10R010	TRANSFORMER	1	
T4001		EIQ7QE007Q	FILTER	1	
			V.RESISTORS		
VR1001		EVM7JSX30B53	V.RESISTOR 5K	1	
VR1002		EVM7JSX30B23	V.RESISTOR 2K	1	
VR1003		EVM7JSX30B53	V.RESISTOR 5K	1	
VR2001		EVM7JSX30B15	V.RESISTOR 100K	1	
VR4001		EVM7JSX30B23	V.RESISTOR 2K	1	
VR6001		EVM7JSX30B15	V.RESISTOR 100K	1	
			CRYSTAL OSCILLATORS		
X1001		VSX0136	CRYSTAL OSCILLATOR	1	
X6001		VSX0299	CRYSTAL OSCILLATOR	1	
X6002		VSX0249	CRYSTAL OSCILLATOR	1	
			MISCELLANEOUS		
		VSC1932	POWER SHIELD (TOP)	1	
		VSC1358	POWER SHIELD (BOTTOM)	1	
		VMZ0651	POWER SHIELD BARRIER	1	
		VSC3013	HEAD AMP SHIELD (TOP)	1	
		VSC3032	HEAD AMP SHIELD (BOTTOM)	1	
		VMX1563	FIXING HINGE	2	(LUMI. & CHRO. PACK)
		VWJ0423	FLEXIBLE CABLE	1	
	■	VEP03676C	LUMINANCE/CHROMINANCE C.B.A		(NLA)
			CAPACITORS		
C01,02		ECUM1H103KBV	C.CAPACITOR CH 50V 0.01U	2	
C03		ECUM1H104ZFN	C.CAPACITOR CH 50V 0.1U	1	
C04		ECUM1C473ZFV	C.CAPACITOR CH 16V 0.047U	1	
C05		ECUM1H221JCV	C.CAPACITOR CH 50V 220P	1	

Ref.No.		Part No.	Part Name & Description	Pcs	Remarks
C06		ECUM1H471JV	C.CAPACITOR CH 50V 470P	1	
C07		ECUM1E681JV	C.CAPACITOR CH 25V 680P	1	
C08		ECUM1H391JV	C.CAPACITOR CH 50V 390P	1	
C09,10		ECUM1H103ZFV	C.CAPACITOR CH 50V 0.01U	2	
C13		ECUM1H103ZFV	C.CAPACITOR CH 50V 0.01U	1	
C14		ECUM1H103KBV	C.CAPACITOR CH 50V 0.01U	1	
C15-17		ECUM1H103ZFV	C.CAPACITOR CH 50V 0.01U	3	
C18		ECUM1H820JCV	C.CAPACITOR CH 50V 82P	1	
C19		ECUM1E681JV	C.CAPACITOR CH 25V 680P	1	
C21,22		ECUM1H103ZFV	C.CAPACITOR CH 50V 0.01U	2	
C3001,02		ECEA0JSJ151	E.CAPACITOR 6.3V 150U	2	
C3003		ECEA1CSN4R7	E.CAPACITOR 16V 4.7U	1	
C3004		ECST1VY104ZR	T.CAPACITOR 35V 0.1U	1	
C3005		ECEA1CKK100	E.CAPACITOR 16V 10U	1	
C3006		ECUM1H330JCV	C.CAPACITOR CH 50V 33P	1	
C3007		ECUM1H220JCV	C.CAPACITOR CH 50V 22P	1	
C3008		ECUM1H150JCV	C.CAPACITOR CH 50V 15P	1	
C3009,10		ECEA1EKK4R7	E.CAPACITOR 25V 4.7U	2	
C3011		ECUM1H820JCV	C.CAPACITOR CH 50V 82P	1	
C3012		ECUM1H560JCV	C.CAPACITOR CH 50V 56P	1	
C3013		ECUM1H220JCV	C.CAPACITOR CH 50V 22P	1	
C3015		ECEA1EKK2R2	E.CAPACITOR 25V 2.2U	1	
C3016		ECUM1H820JCV	C.CAPACITOR CH 50V 82P	1	
C3017		ECEA1EKK2R2	E.CAPACITOR 25V 2.2U	1	
C3019		ECEA1EKK4R7	E.CAPACITOR 25V 4.7U	1	
C3020		ECEA0JKS101	E.CAPACITOR 6.3V 100U	1	
C3021		ECSF1CE106	T.CAPACITOR 16V 10U	1	
C3022,23		ECUM1H103ZFV	C.CAPACITOR CH 50V 0.01U	2	
C3024		ECUM1H150JCV	C.CAPACITOR CH 50V 15P	1	
C3025		ECUM1H103ZFV	C.CAPACITOR CH 50V 0.01U	1	
C3026		ECUM1H102KBV	C.CAPACITOR CH 50V 1000P	1	
C3027		ECEA1EKK4R7	E.CAPACITOR 25V 4.7U	1	
C3030		ECUM1H103ZFV	C.CAPACITOR CH 50V 0.01U	1	
C3031		ECEA1CKK100	E.CAPACITOR 16V 10U	1	
C3032		ECUM1C104ZFV	C.CAPACITOR CH 16V 0.1U	1	
C3033		ECEA1EKK4R7	E.CAPACITOR 25V 4.7U	1	
C3034		ECUM1H103ZFV	C.CAPACITOR CH 50V 0.01U	1	
C3035		ECEA1HKK010	E.CAPACITOR 50V 1U	1	
C3036		ECEA0JKA470	E.CAPACITOR 6.3V 47U	1	
C3037		ECUM1C104ZFV	C.CAPACITOR CH 16V 0.1U	1	
C3038		ECUM1H103ZFV	C.CAPACITOR CH 50V 0.01U	1	
C3039		ECUM1H104ZFN	C.CAPACITOR CH 50V 0.1U	1	
C3040		ECEA1CKK100	E.CAPACITOR 16V 10U	1	
C3041-43		ECUM1H103ZFV	C.CAPACITOR CH 50V 0.01U	3	
C3044		ECEA0GKS221	E.CAPACITOR 220U	1	
C3045		ECEA1HKK010	E.CAPACITOR 50V 1U	1	
C3047		ECUX1H391KBN	C.CAPACITOR CH 50V 390P	1	
C3048		ECUM1H220JCV	C.CAPACITOR CH 50V 22P	1	
C3049		ECUM1H820JCV	C.CAPACITOR CH 50V 82P	1	
C3050		ECUM1H390JCV	C.CAPACITOR CH 50V 39P	1	
C3051		ECUM1H560JCV	C.CAPACITOR CH 50V 56P	1	
C3053		ECUM1H103ZFV	C.CAPACITOR CH 50V 0.01U	1	
C3054		ECEA0JKS101	E.CAPACITOR 6.3V 100U	1	
C3055		ECUM1H103ZFV	C.CAPACITOR CH 50V 0.01U	1	
C3056		ECEA0JKS470	E.CAPACITOR 6.3V 47U	1	
C3057		ECUM1H103ZFV	C.CAPACITOR CH 50V 0.01U	1	
C3059		ECUM1H104ZFN	C.CAPACITOR CH 50V 0.1U	1	
C3061		ECUM1H330JCV	C.CAPACITOR CH 50V 33P	1	
C3065		ECUM1H120JCV	C.CAPACITOR CH 50V 12P	1	
C3066		ECUM1H820JCV	C.CAPACITOR CH 50V 82P	1	
C3067		ECUM1H331KBV	C.CAPACITOR CH 50V 330P	1	
C3068		ECUM1H103ZFV	C.CAPACITOR CH 50V 0.01U	1	
C3069		ECUM1H101JCV	C.CAPACITOR CH 50V 100P	1	
C3070		ECEA1CKK100	E.CAPACITOR 16V 10U	1	
C3071		ECEA0GKS221	E.CAPACITOR 220U	1	
C3073		ECUM1H471JV	C.CAPACITOR CH 50V 470P	1	
C3075		ECUM1H470JCV	C.CAPACITOR CH 50V 47P	1	
C3076		ECUM1H270JCV	C.CAPACITOR CH 50V 27P	1	
C3080		ECCZ1H181J	.CAPACITOR CH 50V 180P	1	
C3150		ECUM1H151JV	C.CAPACITOR CH 50V 150P	1	
C8001		ECEA1CKK100	E.CAPACITOR 16V 10U	1	
C8002		ECUM1E223ZFV	C.CAPACITOR CH 25V 0.022U	1	
C8003		ECUM1H271KBV	C.CAPACITOR CH 50V 270P	1	
C8004		ECUM1H471KBV	C.CAPACITOR CH 50V 470P	1	
C8005		ECUM1H104ZFN	C.CAPACITOR CH 50V 0.1U	1	

Ref.No.		Part No.	Part Name & Description	Pcs	Remarks
C8006-18		ECUM1H103ZFV	C.CAPACITOR CH 50V 0.01U	13	
C8019		ECEA1EKK4R7	E.CAPACITOR 25V 4.7U	1	
C8020		ECEA1EKK2R2	E.CAPACITOR 25V 2.2U	1	
C8021		ECUM1H103ZFV	C.CAPACITOR CH 50V 0.01U	1	
C8022		ECEA1EKK3R3	E.CAPACITOR 25V 3.3U	1	
C8023,24		ECUM1H103ZFV	C.CAPACITOR CH 50V 0.01U	2	
C8025		ECEA0JKA101	E.CAPACITOR 6.3V 100U	1	
C8026		ECUM1H030CCV	C.CAPACITOR CH 50V 3P	1	
C8027		ECUM1H102KBV	C.CAPACITOR CH 50V 1000P	1	
C8028		ECEA0JSJ151	E.CAPACITOR 6.3V 150U	1	
C8029		ECUM1H103ZFV	C.CAPACITOR CH 50V 0.01U	1	
C8030		ECUM1H101JCV	C.CAPACITOR CH 50V 100P	1	
C8031-35		ECUM1H103ZFV	C.CAPACITOR CH 50V 0.01U	5	
C8036		ECUM1C474ZFM	C.CAPACITOR CH 16V 0.47U	1	
C8037		ECUM1H680JCV	C.CAPACITOR CH 50V 68P	1	
C8038		ECUM1H332KBV	C.CAPACITOR CH 50V 3300P	1	
C8039		ECEA1HKK0R1	E.CAPACITOR 50V 0.1U	1	
C8043		ECUM1C104ZFV	C.CAPACITOR CH 16V 0.1U	1	
C8045		ECUM1H390JCV	C.CAPACITOR CH 50V 39P	1	
C8047,48		ECUM1H103ZFV	C.CAPACITOR CH 50V 0.01U	2	
C8049		ECEA0JKS220	E.CAPACITOR 6.3V 22U	1	
C8050		ECUM1H151JCN	C.CAPACITOR CH 50V 150P	1	
C8053		ECUM1H104ZFN	C.CAPACITOR CH 50V 0.1U	1	
			DIODES		
D02		MA110	DIODE	1	
D3003,04		MA141K	DIODE	2	
D3005		MA165	DIODE	1	
			DELAY		
DL8001		VLD0174	DELAY	1	
			FILTERS		
FL3001		ELB4C014	FILTER	1	
FL3002		VLF0806	FILTER	1	
FL3003		ELB4A020	FILTER	1	
FL8001		ELB4B010	FILTER	1	
FL8002		ELB4B048	FILTER	1	
FL8003		VLF0769	FILTER	1	
FL8008		ELB4B024	FILTER	1	
FL8009		VLF0750	FILTER	1	
			ICS		
IC01		AN3237FA	IC	1	
IC3001		VEFH08D	IC	1	
IC3002		MST001MS	IC	1	
IC3003		AN3580SB	IC	1	
IC3004		TL8809F	IC	1	
IC8001		M52059AFP	IC	1	
L3001,02		VLQEL05T101K	COIL H	2	
L3003		VLQEL04X180K	COIL H	1	
L3004		VLQEL04X121K	COIL H	1	
L3005		VLQEL04X101K	COIL H	1	
L3007		VLQEL05T101K	COIL H	1	
L3008		VLQEL04X101K	COIL H	1	
L3009		VLQEL05T101K	COIL H	1	
L3010		VLQEL04X330K	COIL H	1	
L3011		VLQEL04X151K	COIL H	1	
L3012		VLQEL04X150K	COIL H	1	
L3013		VLQEL05T101K	COIL H	1	
L3015		VLQEL04X470K	COIL H	1	
L3016		VLQEL04X181K	COIL H	1	
L3017		VLQEL04X100K	COIL H	1	
L3018		VLQEL04X221K	COIL H	1	
L3020		VLQEL04X470K	COIL H	1	
L8002		VLQEL04X101K	COIL H	1	
L8003		VLQEL05T331K	COIL H	1	
L8012		VLQEL05T101K	COIL H	1	

Ref.No.		Part No.	Part Name & Description	Pcs	Remarks
L8013		VLQEL04X150K	COIL H	1	
L8014		VLQEL05T681K	COIL H	1	
L8015		VLQEL04X121K	COIL H	1	
L8016		VLQEL05T101K	COIL H	1	
L8017		VLQEL04X101K	COIL H	1	
L8018		VLQEL05T101K	COIL H	1	
			CONNECTORS		
P3001		VJS2237	CONNECTOR	1	
P3002		VJP2263	CONNECTOR	1	
			TRANSISTORS		
Q3001		2SD1819	TRANSISTOR	1	
Q3002		2SC3931	TRANSISTOR	1	
Q3003		2SD1819	TRANSISTOR	1	
Q3005,06		2SD1819	TRANSISTOR	2	
Q3007		2SC3931	TRANSISTOR	1	
Q3008		2SD1819	TRANSISTOR	1	
Q3010		2SD1819	TRANSISTOR	1	
Q3012		2SC3931	TRANSISTOR	1	
Q3013,14		2SB1218	TRANSISTOR	2	
Q3015		2SC3931	TRANSISTOR	1	
Q3020,21		2SD1819	TRANSISTOR	2	
			COMBINATION PARTS		
QR10		GN1L3Z	TRANSISTOR-RESISTOR	1	
QR3001		GA1F4M-T1	TRANSISTOR-RESISTOR	1	
QR3006		GA1L4M-T1	TRANSISTOR-RESISTOR	1	
QR3008		GA1F4M-T1	TRANSISTOR-RESISTOR	1	
QR8001		FMG1-T98	TRANSISTOR-RESISTOR	1	
QR8004,05		GA1F4M-T1	TRANSISTOR-RESISTOR	2	
QR8006		FMW1-T98	TRANSISTOR-RESISTOR	1	
QR8007		FMG2-T98	TRANSISTOR-RESISTOR	1	
			RESISTORS		
R01		ERJ3GEYJ224	M.RESISTOR CH 3W 220K	1	
R02,03		ERJ3GEYJ103	M.RESISTOR CH 3W 10K	2	
R04		ERJ3GEYJ225	M.RESISTOR CH 3W 2.2M	1	
R07,08		ERJ3GEYJ472	M.RESISTOR CH 3W 4.7K	2	
R09		ERJ3GEYJ221	M.RESISTOR CH 3W 220	1	
R11		ERJ3GEYJ102	M.RESISTOR CH 3W 1K	1	
R13		ERJ3GEYJ393	M.RESISTOR CH 3W 39K	1	
R14		ERJ3GEYJ133	M.RESISTOR CH 3W 13K	1	
R15		ERJ3GEYJ563	M.RESISTOR CH 3W 56K	1	
R16		VRRD2EJ471B	.RESISTOR W	1	
R22		ERJ3GEYJ394	M.RESISTOR CH 3W 390K	1	
R23		ERJ3GEYJ153	M.RESISTOR CH 3W 15K	1	
R24,25		VRRD2EG152A	.RESISTOR W	2	
R26		ERJ3GEYJ271	M.RESISTOR CH 3W 270	1	
R28		VRRD3EJ473A	.RESISTOR W	1	
R29		ERJ3GEYJ564	M.RESISTOR CH 3W 560K	1	
R31,32		VRRD3FF1002B	V.RESISTOR 10K	2	
R35		VRRD2FF3001B	.RESISTOR W	1	
R36		VRRD2FF1501B	V.RESISTOR 1.5K	1	
R37		VRRD3FF8201B	V.RESISTOR 82K	1	
R40,41		VRRD3FF7501B	.RESISTOR W	2	
R42,43		VRRD3FF1302B	.RESISTOR W	2	
R47		VRRD3FF1302B	.RESISTOR W	1	
R49		VRRD3FF2202B	.RESISTOR W	1	
R51		ERJ3GEYJ103	M.RESISTOR CH 3W 10K	1	
R3001,02		ERJ3GEYJ561	M.RESISTOR CH 3W 560	2	
R3003,04		ERJ3GEYJ102	M.RESISTOR CH 3W 1K	2	
R3005		ERJ3GEYJ272	M.RESISTOR CH 3W 2.7K	1	
R3006		ERJ3GEYJ182	M.RESISTOR CH 3W 1.8K	1	
R3007		ERJ3GEYJ561	M.RESISTOR CH 3W 560	1	
R3008		ERJ3GEYJ102	M.RESISTOR CH 3W 1K	1	
R3010		ERJ3GEYJ102	M.RESISTOR CH 3W 1K	1	
R3011		ERJ3GEYJ821	M.RESISTOR CH 3W 820	1	
R3012		ERJ3GEYJ102	M.RESISTOR CH 3W 1K	1	
R3013,14		ERJ3GEYJ273	M.RESISTOR CH 3W 27K	2	

Ref.No.		Part No.	Part Name & Description	Pcs	Remarks
R3015		ERJ3GEYJ821	M.RESISTOR CH 3W 820	1	
R3016,17		ERJ3GEYJ103	M.RESISTOR CH 3W 10K	2	
R3019		ERJ3GEYJ102	M.RESISTOR CH 3W 1K	1	
R3021		ERJ3GEYJ152	M.RESISTOR CH 3W 1.5K	1	
R3022		ERJ3GEY0R00	M.RESISTOR CH 3W 0.00	1	
R3023,24		ERJ3GEYJ223	M.RESISTOR CH 3W 22K	2	
R3025		ERJ3GEYJ181	M.RESISTOR CH 3W 180	1	
R3026		ERJ3GEYJ101	M.RESISTOR CH 3W 100	1	
R3028		ERJ3GEYJ682	M.RESISTOR CH 3W 6.8K	1	
R3029		ERJ3GEYJ123	M.RESISTOR CH 3W 12K	1	
R3030		ERJ3GEYJ391	M.RESISTOR CH 3W 390	1	
R3031		ERJ3GEYJ123	M.RESISTOR CH 3W 12K	1	
R3032		ERJ3GEYJ102	M.RESISTOR CH 3W 1K	1	
R3033		ERJ3GEYJ471	M.RESISTOR CH 3W 470	1	
R3034		ERJ3GEYJ102	M.RESISTOR CH 3W 1K	1	
R3035		ERJ3GEYJ750	M.RESISTOR CH 3W 75	1	
R3036,37		ERJ3GEYJ223	M.RESISTOR CH 3W 22K	2	
R3039		ERJ3GEYJ331	M.RESISTOR CH 3W 330	1	
R3040		ERJ3GEYJ471	M.RESISTOR CH 3W 470	1	
R3041		ERJ3GEYJ821	M.RESISTOR CH 3W 820	1	
R3042		ERJ6GMYJ102	M.RESISTOR CH 1/10W 1K	1	
R3043		ERJ3GEYJ271	M.RESISTOR CH 3W 270	1	
R3044		ERJ3GEYJ680	M.RESISTOR CH 3W 68	1	
R3045,46		ERJ3GEYJ102	M.RESISTOR CH 3W 1K	2	
R3049,50		ERJ3GEYJ102	M.RESISTOR CH 3W 1K	2	
R3052		ERJ3GEYJ333	M.RESISTOR CH 3W 33K	1	
R3053		ERJ3GEYJ153	M.RESISTOR CH 3W 15K	1	
R3054		ERJ3GEYJ102	M.RESISTOR CH 3W 1K	1	
R3059		ERJ3GEYJ102	M.RESISTOR CH 3W 1K	1	
R3062		ERJ3GEYJ103	M.RESISTOR CH 3W 10K	1	
R3063		ERJ3GEYJ562	M.RESISTOR CH 3W 5.6K	1	
R3068,69		ERJ3GEYJ822	M.RESISTOR CH 3W 8.2K	2	
R3071		ERJ3GEYJ392	M.RESISTOR CH 3W 3.9K	1	
R3072		ERJ3GEYJ561	M.RESISTOR CH 3W 560	1	
R3073		ERJ3GEYJ101	M.RESISTOR CH 3W 100	1	
R3074		ERJ3GEYJ102	M.RESISTOR CH 3W 1K	1	
R3075		ERJ3GEYJ681	M.RESISTOR CH 3W 680	1	
R3076		ERJ3GEYJ391	M.RESISTOR CH 3W 390	1	
R3077		ERJ3GEYJ102	M.RESISTOR CH 3W 1K	1	
R3080		ERJ3GEYJ102	M.RESISTOR CH 3W 1K	1	
R3081		ERJ3GEYJ561	M.RESISTOR CH 3W 560	1	
R3082		ERJ3GEYJ122	M.RESISTOR CH 3W 1.2K	1	
R3083		ERJ3GEYJ272	M.RESISTOR CH 3W 2.7K	1	
R3084		ERJ3GEYJ103	M.RESISTOR CH 3W 10K	1	
R3085		ERJ3GEYJ122	M.RESISTOR CH 3W 1.2K	1	
R3086		ERJ3GEYJ102	M.RESISTOR CH 3W 1K	1	
R3087		ERJ3GEYJ104	M.RESISTOR CH 3W 100K	1	
R3088		ERJ3GEYJ102	M.RESISTOR CH 3W 1K	1	
R3089		ERJ3GEY0R00	M.RESISTOR CH 3W 0.00	1	
R3091		ERJ3GEYJ222	M.RESISTOR CH 3W 2.2K	1	
R3092		ERJ3GEY0R00	M.RESISTOR CH 3W 0.00	1	
R3093		ERJ3GEYJ101	M.RESISTOR CH 3W 100	1	
R3094		ERJ3GEYJ102	M.RESISTOR CH 3W 1K	1	
R3095		ERDS2TJ105	C.RESISTOR 1/4W 1000K	1	
R8001-03		ERJ3GEYJ102	M.RESISTOR CH 3W 1K	3	
R8004		ERJ3GEYJ103	M.RESISTOR CH 3W 10K	1	
R8005		ERJ3GEYJ102	M.RESISTOR CH 3W 1K	1	
R8006		ERJ3GEYJ103	M.RESISTOR CH 3W 10K	1	
R8007		ERJ6GMYJ225	M.RESISTOR CH 1/10W 2.2M	1	
R8008		ERJ3GEYJ271	M.RESISTOR CH 3W 270	1	
R8009		ERJ3GEYJ122	M.RESISTOR CH 3W 1.2K	1	
R8010		ERJ3GEYJ821	M.RESISTOR CH 3W 820	1	
R8011		ERJ3GEYJ472	M.RESISTOR CH 3W 4.7K	1	
R8012		ERJ3GEYJ102	M.RESISTOR CH 3W 1K	1	
R8013		ERJ3GEYJ563	M.RESISTOR CH 3W 56K	1	
R8014		ERJ3GEYJ222	M.RESISTOR CH 3W 2.2K	1	
R8015		ERJ3GEYJ182	M.RESISTOR CH 3W 1.8K	1	
R8017		ERJ3GEYJ822	M.RESISTOR CH 3W 8.2K	1	
R8018		ERJ3GEYJ153	M.RESISTOR CH 3W 15K	1	
R8020		ERJ3GEYJ182	M.RESISTOR CH 3W 1.8K	1	
R8025,26		ERJ3GEYJ102	M.RESISTOR CH 3W 1K	2	
R8027		ERJ3GEYJ433	M.RESISTOR CH 3W 43K	1	
R8028		ERJ3GEYJ182	M.RESISTOR CH 3W 1.8K	1	
R8029		ERJ3GEYJ102	M.RESISTOR CH 3W 1K	1	
R8101		ERJ3GEYJ223	M.RESISTOR CH 3W 22K	1	

Ref.No.		Part No.	Part Name & Description	Pcs	Remarks
R8103		ERJ3GEYJ473	M.RESISTOR CH 3W 47K	1	
R8105		ERJ3GEYJ102	M.RESISTOR CH 3W 1K	1	
R8106		ERJ3GEYJ272	M.RESISTOR CH 3W 2.7K	1	
R8107,08		ERJ3GEYJ102	M.RESISTOR CH 3W 1K	2	
R8109		ERJ3GEYJ272	M.RESISTOR CH 3W 2.7K	1	
R8110		ERJ3GEYJ182	M.RESISTOR CH 3W 1.8K	1	
R8111		ERJ3GEYJ223	M.RESISTOR CH 3W 22K	1	
R8112		ERJ6GMYJ223	M.RESISTOR CH 1/10W 22K	1	
R8113		ERJ3GEYJ182	M.RESISTOR CH 3W 1.8K	1	
R8116		ERJ3GEYJ473	M.RESISTOR CH 3W 47K	1	
R8133		ERJ3GEY0R00	M.RESISTOR CH 3W 0.00	1	
VR3001,02		EVM7JSX30B23	V.RESISTOR	2	
VR3003		EVM7JSX30B52	V.RESISTOR 500	1	
VR3004		EVM7JSX30B54	V.RESISTOR 50K	1	
VR3005		EVM7JSX30B52	V.RESISTOR 500	1	
VR8001		EVM7JSX30B13	V.RESISTOR 1K	1	
VR8007		EVM7JSX30B24	V.RESISTOR 20K	1	
X8001		VSX0188	CHRISTAL OSCILLATOR	1	
	■	VEP06613A	VTR OPERATION C.B.A.		(N/A)
			DIODES		
D6501		BR3668S	DIODE	1	
D6502,03		MA141WA	DIODE	2	
D6504		MA141K	DIODE	1	
D6505		MA141WA	DIODE	1	
D6508		MA4033M	DIODE	1	
D6510		MA141WA	DIODE	1	
D6511,12		MA141K	DIODE	2	
D6514		MA141K	DIODE	1	
D6516-20		BR3668S	DIODE	5	
D6522		BR3668S	DIODE	1	
			CONNECTOR		
P6501		VJP2107	CONNECTOR	1	
			SWITCHES		
SW6501,02		ESD100127	SWITCH	2	
SW6503-08		EVQQSB04B	SWITCH	6	
SW6510-12		EVQQSB04B	SWITCH	3	
SW6514-17		EVQQSB04B	SWITCH	4	
SW6518		VST0098	SWITCH	1	
	■	VEP04281B	VTR JACK C.B.A.		(N/A)
			CAPACITORS		
C4901		ECUM1E104ZFN	C.CAPACITOR CH 25V 0.1U	1	
C4902,03		ECUM1H221JN	C.CAPACITOR CH 50V 220P	2	

Ref.No.		Part No.	Part Name & Description	Pcs	Remarks
			DIODES		
D4902		MA738	DIODE	1	
D4903		MA151WK	DIODE	1	
D4904		MA151WA	DIODE	1	
D4905		MA3056	DIODE	1	
			CONNECTORS		
P4901		VJP1610T	CONNECTOR	1	
P4902		VJP1609T	CONNECTOR(MALE)	1	
P4903		VJP1608T	CONNECTOR(MALE)	1	
P4904,05		VJP1611T	CONNECTOR(MALE)	2	
P4906		VJP1244T	CONNECTOR(MALE) 4P	1	
			TRANSISTOR CHIP		
Q4901		2SD601	TRANSISTOR CHIP	1	
			COMBINATION PARTS		
QR4901		UN2213	TRANSISTOR-RESISTOR	1	
			RESISTORS		
R4902		ERJ6GMYJ103	M.RESISTOR CH 1/10W 10K	1	
R4903		ERJ6GMYJ222	M.RESISTOR CH 1/10W 2.2K	1	
R4904		ERJ6GMYJ101	M.RESISTOR CH 1/10W 100	1	
R4905		ERJ6GMYJ222	M.RESISTOR CH 1/10W 2.2K	1	
R4906		ERJ6GMYJ101	M.RESISTOR CH 1/10W 100	1	
	■	VEP00H73B	FE HEAD C.B.A.		(NLA)
			CAPACITORS		
C1501		ECEA1CKS100	E.CAPACITOR 16V 10U	1	
C1502		ECKF1H472ZF	C.CAPACITOR 50V 4700P	1	
C1503		VCYD1C103MR1	S.CAPACITOR 16V 0.01U	1	
C1504		ECQV1H333JZ	P.CAPACITOR 50V 0.033U	1	
L1501		VLQEL05F221K	COIL 220UH	1	
Q1504		2SC2603AE2F	TRANSISTOR	1	
			RESISTORS		
R1503		ERDS2TJ333	C.RESISTOR 1/4W 33K	1	
			FILTER		
T1501		EIQ7QT007Q	FILTER	1	
	■	VEK4643	E.V.F. CONNECTOR C.B.A.		(NLA)

Ref.No.		Part No.	Part Name & Description	Pcs	Remarks
J1504		VJJ0163	CONNECTOR	1	
P1505		VJP1614T	CONNECTOR(MALE)	1	
	■	VEK4644	REMOTE CONTROL JACK C.B.A.		(NLA)
			MISCELLANEOUS		
		VJJ0125	REMOTE CONTROL JACK	1	
	■	VEK4730	ZOOM SW, START/STOP SW,		(NLA)
			SUB START/STOP SW C.B.A.		
			MISCELLANEOUS		
		EVQQSU04W	SWITCH	2	
	■	VES0413	MECHANISM CONNECTION C.B.A.		(NLA)
			TRANSISTOR		
Q1503		ON2170	TRANSISTOR	1	
			MISCELLANEOUS		
		VJP1229R	CONNECTOR 2P	1	
		VJP1235T	CONNECTOR 8P	1	
		VMX1280	DETECTOR SPACER	1	
		VSS0193	MODE SWITCH	1	
	■	VEK3414	TAKE-UP PHOTO C.B.A.		(NLA)
			MISCELLANEOUS		
		PN158NV	PHOTO Tr.	1	
		VMD0606	PHOTO Tr. HOLDER	1	
	■	VEK3415	SUPPLY PHOTO C.B.A.		(NLA)

Ref.No.		Part No.	Part Name & Description	Pcs	Remarks
			MISCELLANEOUS		
		PN158NV	PHOTO Tr.	1	
		VMD0607	PHOTO Tr. HOLDER	1	

AC Adaptor

VW-AM10 EN EM

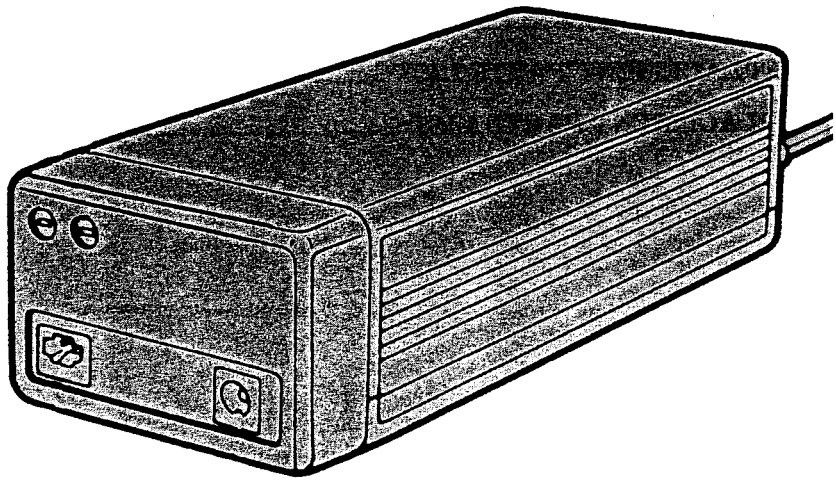

SPECIFICATIONS

ITEM	SPECIFICATION
POWER	Source: 100~240 V AC 50/60 Hz (Automatic Voltage Adjustment)
	Consumption: 44 watts
	Output: DC 12 V, 1.8 A for VHS Movie DC 12 V, 1.5 A for battery charge
DIMENSIONS	80(W) × 54(H) × 196(D) mm
WEIGHT	Approx. 0.62 kg

Weight and dimensions shown are approximate.
Specifications are subject to change without notice.

CAUTION: FOR USE WITH VHS VIDEO MOVIE, MODEL NV-M1000.

WARNING: TO PREVENT FIRE OR SHOCK HAZARD, DO NOT EXPOSE THIS EQUIPMENT TO RAIN OR MOISTURE.

CONTENTS

1. CONTROLS AND COMPONENTS 1
2. DISASSEMBLY METHOD 1
3. ELECTRICAL ADJUSTMENT PROCEDURES 2
4. MAIN C.B.A. (VEP61058A), SECONDARY SUB MAIN C.B.A. (VEP60190A) & FRONT PANEL C.B.A. (VEP60182A) 3
5. AC ADAPTOR SCHEMATIC DIAGRAM 5
6. EXPLODED VIEW 8
   ❶ CHASSIS & FRAME SECTION 8
7. MECHANICAL REPLACEMENT PARTS LIST 9
8. ELECTRICAL REPLACEMENT PARTS LIST 9

1. CONTROLS AND COMPONENTS

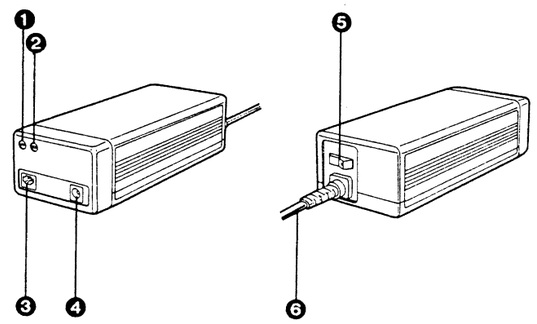

❶ Power Indicator
❷ Charging Indicator
❸ DC Output Socket
❹ Battery Pack Charging Socket
❺ Power On/Off Switch
❻ Mains Lead

2. DISASSEMBLY METHOD

1. REMOVAL OF TOP CASE AND BOTTOM CASE

(1) Unscrew 4 Screws (A) and then remove the Top Case and Bottom Case.

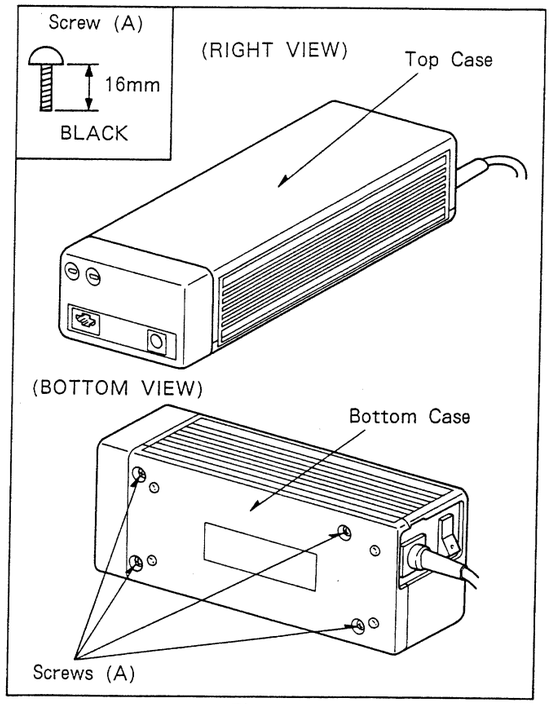

Fig. 1

2. REMOVAL OF FRONT PANEL

(1) Remove the Front Panel dis connecting the connector P1.

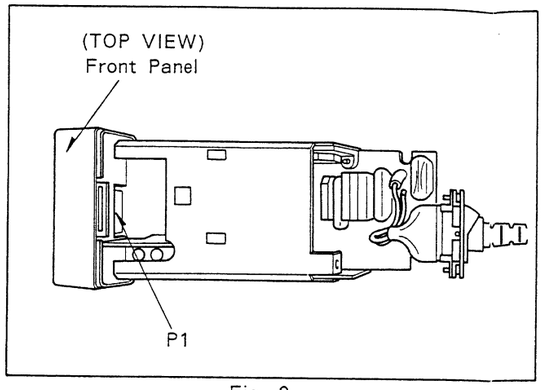

Fig. 2

3. REMOVAL OF MAIN C.B.A.

(1) Unscrew 3 Screws (B) and then remove the Top Shield.
(2) Unscrew the Screw (C) and then remove the Bottom Shield.

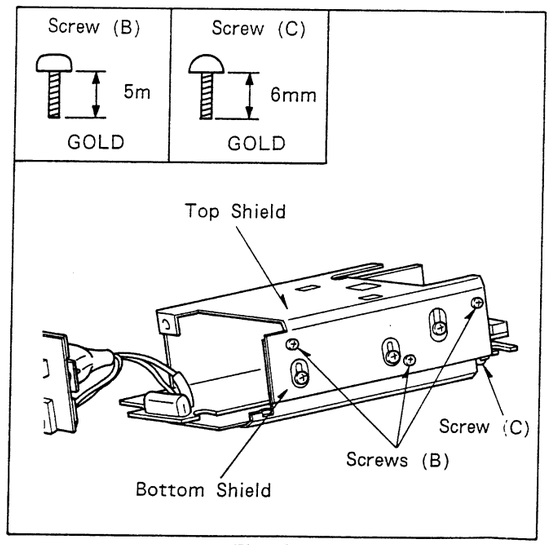

Fig. 3

4. REMOVAL OF FRONT PANEL C.B.A.

(1) Unscrew 2 Screws (D).
(2) While pushing 2 Portions of the DC Output Socket and the Battery Pack Charging Socket, Remove the Front Panel C.B.A.

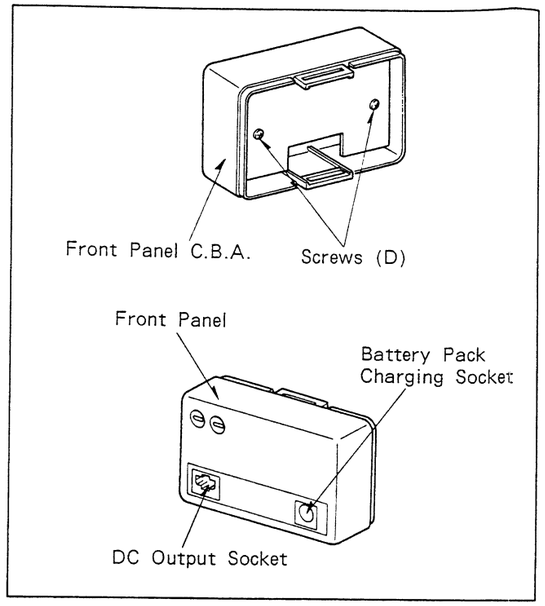

Fig. 4

3. ELECTRICAL ADJUSTMENT PROCEDURES

This section provides complete electrical adjustment procedures which may be required for electronic circuit of the AC Adaptor.

3-1. TEST EQUIPMENT

To perform the electrical adjustments completely following equipments are required.

1. D.V.M. (Digital Volt Meter)
   Voltage Range : 0.001~50V
2. Oscilloscope
   Voltage Range : 0.005~50V/div
3. DC Ammeter
   Current Range : 0~10A
4. DC Voltmeter
   Voltage Range : 0~20V
5. Plastic Tip Driver
6. Resistor (5ohm Variable 200W)
7. DC Power Supply (5A/20V)

3-2. INITIAL CHARGE CURRENT AND SCHMITT VOLTAGE ADJUSTMENT

TP	ADJ.	MODE	INPUT
BATTERY HOLDER (+) (−)	VR201 VR202	CHARGE	
TAPE	**M. EQ.**	**SPEC.**	
	DC AM/ D.V.M.	A=1.5+−0.005[A] VR201 From High to Low VR20	

1. Make the connection as shown below.

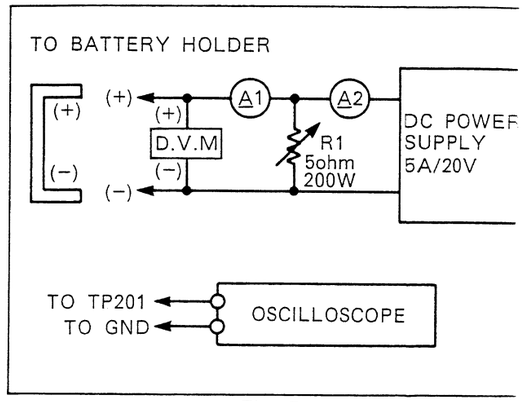

Fig. 5

2. Adjust the output of the DC power supply that the indication of the DC voltme becomes 14.0V and adjust R1 so that indication of the DC ammeter (A2) becor 3.0A.
3. Adjust VR201 so that the indication of the ammeter (A1) becomes 1.5+−0.05A.
4. Adjust the output level of the DC po supply to 15.3V.
5. Adjust the VR202 so that voltage at TP201 changed from high (approx. 15V) to (approx. 0.5).

It is also available to use a resistor 5ohm/50W 2 pieces of 10ohm/20W resistors inparallel use equevalent, instead of variable resist 5ohm/200W to get specified current.

4. MAIN C.B.A. (VEP61058A), SECONDARY SUB MAIN C.B.A. (VEP60190A) & FRONT PANEL C.B.A. (VEP60182A)

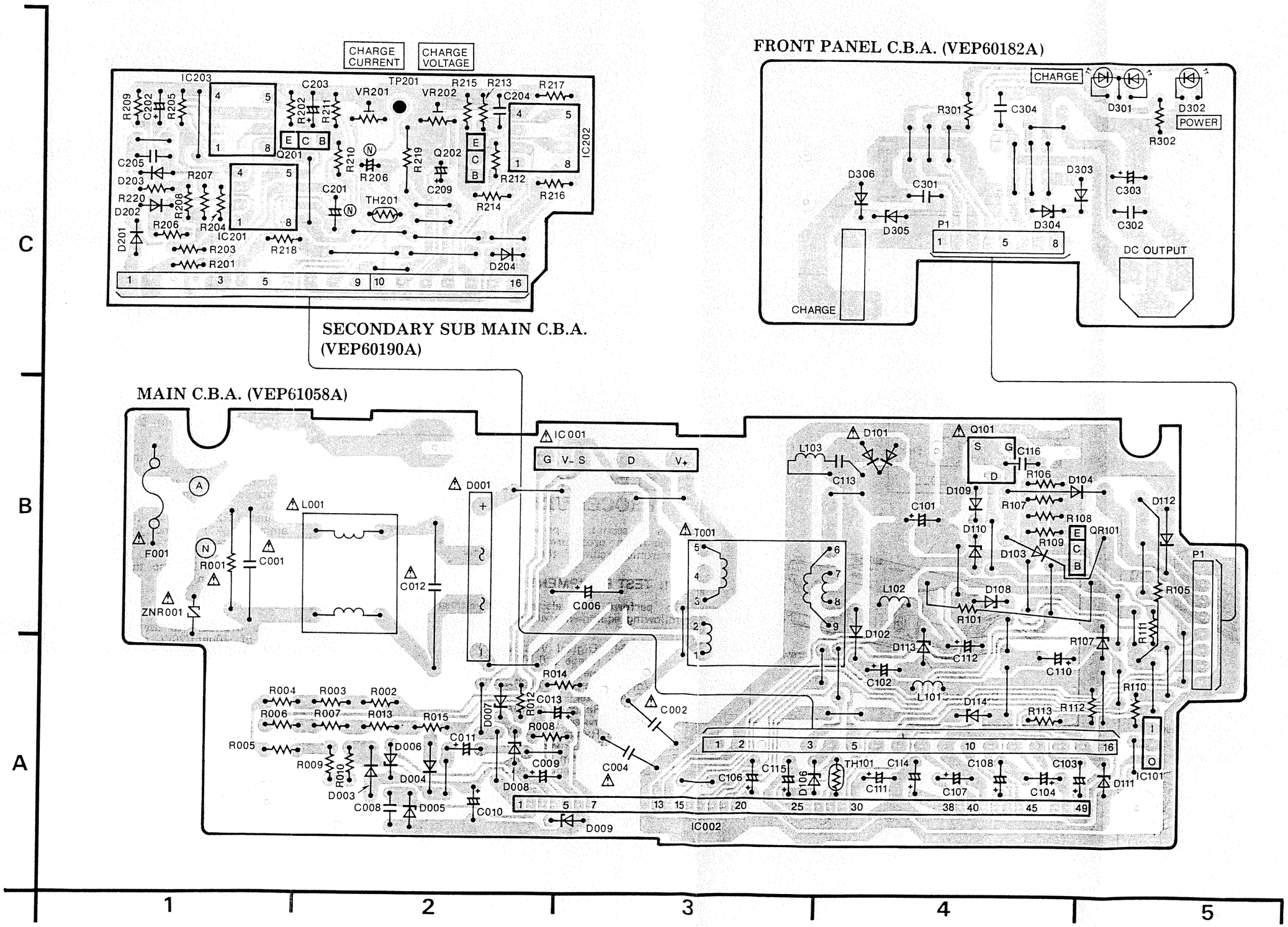

MAIN C.B.A. & SECONDARY SUB MAIN C.B.A.	
Transistor	
Q101	B-4
Q201	C-1
Q202	C-2
Transistor & Resistor	
QR101	B-5
Integrated Circuit	
IC001	B-3
IC002	A-3
IC101	A-5
IC201	C-1
IC202	C-2
IC203	C-1
Test Point	
TP201	C-2
Adjustment	
VR201	C-2
VR202	C-2
Connector	
P1	C-4
P1	B-5

ADDRESS INFORMATION

5. AC ADAPTOR SCHEMATIC DIAGRAM

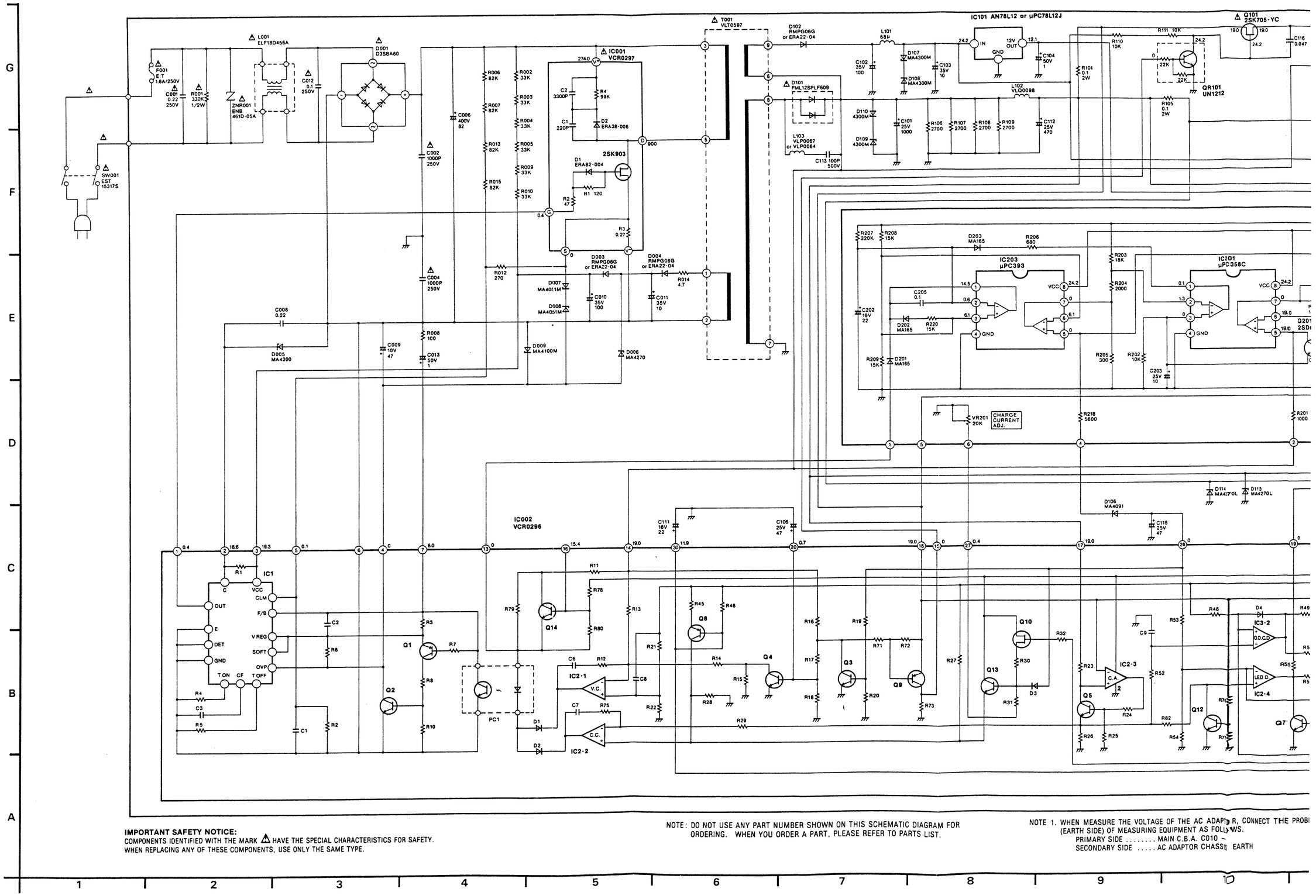

IMPORTANT SAFETY NOTICE:
COMPONENTS IDENTIFIED WITH THE MARK ⚠ HAVE THE SPECIAL CHARACTERISTICS FOR SAFETY.
WHEN REPLACING ANY OF THESE COMPONENTS, USE ONLY THE SAME TYPE.

NOTE: DO NOT USE ANY PART NUMBER SHOWN ON THIS SCHEMATIC DIAGRAM FOR ORDERING. WHEN YOU ORDER A PART, PLEASE REFER TO PARTS LIST.

NOTE 1. WHEN MEASURE THE VOLTAGE OF THE AC ADAPTOR, CONNECT THE PROBE (EARTH SIDE) OF MEASURING EQUIPMENT AS FOLLOWS.
PRIMARY SIDE ..... MAIN C.B.A. C010 ⏚
SECONDARY SIDE ..... AC ADAPTOR CHASSIS EARTH

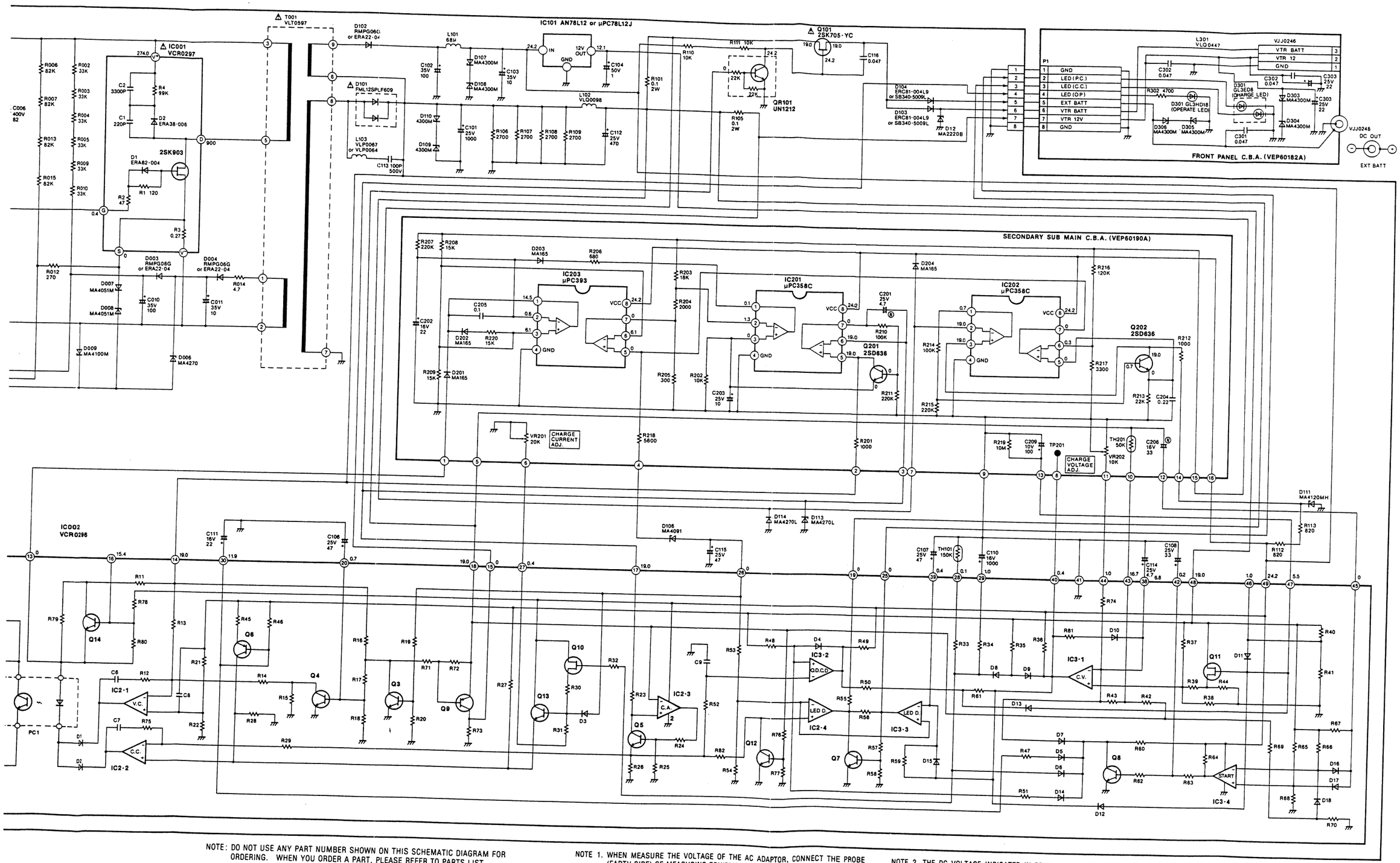

NOTE: DO NOT USE ANY PART NUMBER SHOWN ON THIS SCHEMATIC DIAGRAM FOR ORDERING. WHEN YOU ORDER A PART, PLEASE REFER TO PARTS LIST.

NOTE 1. WHEN MEASURE THE VOLTAGE OF THE AC ADAPTOR, CONNECT THE PROBE (EARTH SIDE) OF MEASURING EQUIPMENT AS FOLLOWS.
PRIMARY SIDE ..... MAIN C.B.A. C010 —
SECONDARY SIDE ..... AC ADAPTOR CHASSIS EARTH

NOTE 2. THE DC VOLTAGE INDICATED IN PRIMARY SIDE IS MEASURED WHEN INPUT AC 220V IS APPLIED.
THE MEASUREMENT MODE OF DC VOLTAGE ON THIS DIAGRAM IS NOLOAD.

6. EXPLODED VIEWS

❶ CHASSIS & FRAME SECTION

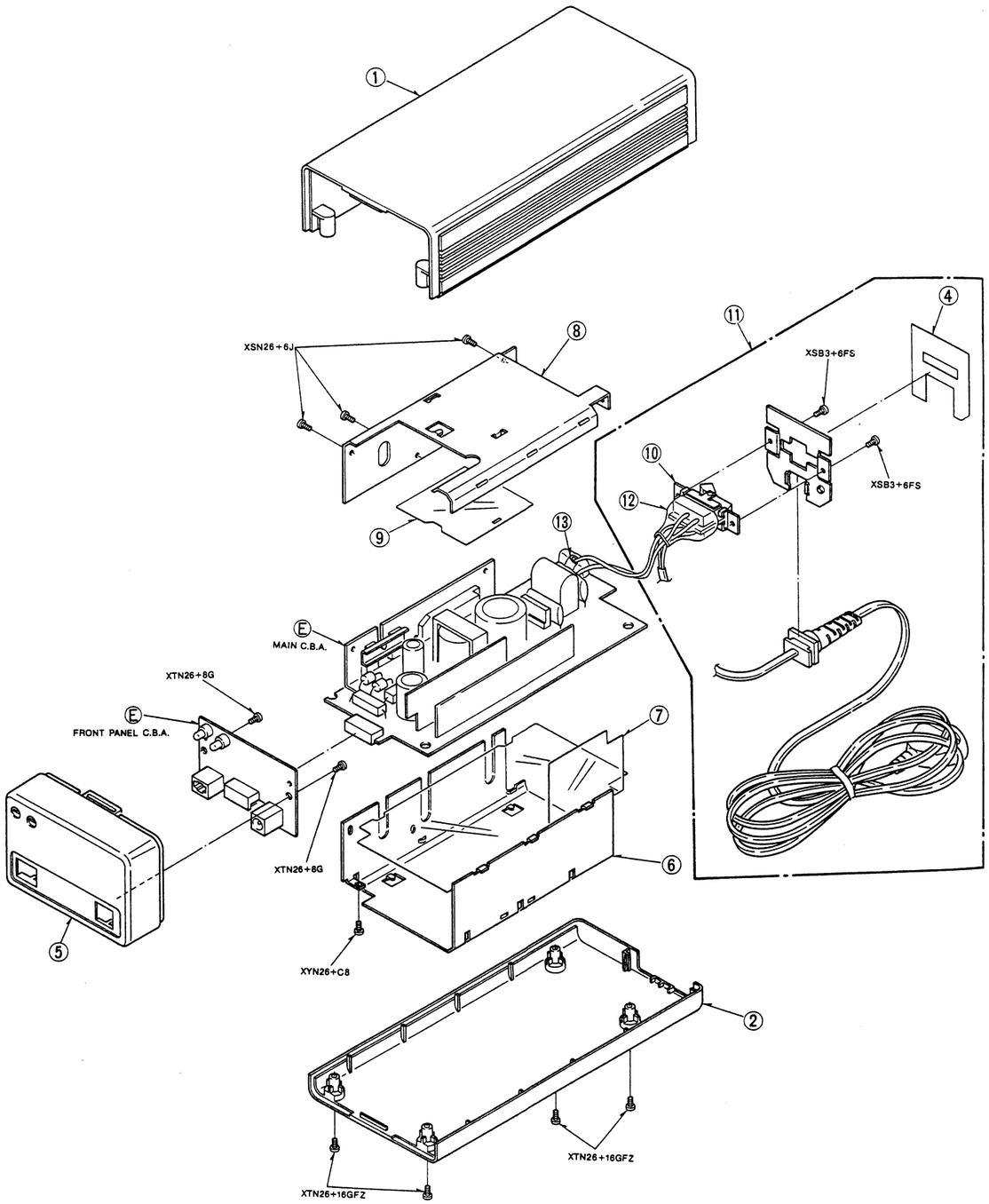

7. MECHANICAL REPLACEMENT PARTS LIST

Note:1.* Be sure to make your orders of replacement parts according to this list.
2.IMPORTANT SAFETY NOTICE
Components identified with the mark <!> have the special characteristics for safety. When replacing any of these components,use only the same type.

Ref.No.		Part No.	Part Name & Description	Pcs	Remarks
1(1)		VKM1979	TOP COVER	1	
2(1)		VKM1978	BOTTOM COVER	1	
4(1)		VGH2273	NAME PLATE	1	
5(1)		VYP2988	FRONT PANEL (1) UNIT	1	
6(1)		VSC2983	BOTTOM SHIELD	1	
7(1)		VMZ1505	BOTTOM BARRIER	1	
8(1)		VSC2982	TOP SHIELD	1	
9(1)		VMZ1504	TOP BARRIER	1	
10(1)		EST15317S	POWER SWITCH	1	
11(1)		VEK4948	AC POWER CORD UNIT	1	NV-M1000EN <!>
11(1)		VEK4951	AC POWER CORD UNIT	1	NV-M1000EM <!>
12(1)		VMZ0580	POWER SWITCH COVER	1	
13(1)		VMZ0997	POWER CORD COVER	1	
21(2)		VQT3494	OPERATING INSTRUCTIONS	1	VW-AM10EN <!>
					(NV-M1000EN)
21(2)		VQT3495	OPERATING INSTRUCTION	1	VW-AM10EM <!>
					(NV-M1000EM)
22(2)		VJA0180	BATTERY PACK	1	
			CHARGING CONNECTOR		
23(2)		VJA0573	DC INPUT CABLE	1	

8. ELECTRICAL REPLACEMENT PARTS LIST

Note:1.* Be sure to make your orders of replacement parts according to thi
list.
2.IMPORTANT SAFETY NOTICE
Components identified with the mark <!> have the special characteri
tics for safety. When replacing any of these components,use only th
same type.
3.Unless otherwise specified,
All resistors are in OHMS ,K=1,000 OHMS. All capacitors are in MICF
FARADS(uf),P=uuF.
4.The P.C.Board units marked width'■'show below the main assembled p

Ref.No.		Part No.	Part Name & Description	Pcs	Remarks
		VEP61058A	MAIN C.B.A.	1	(NLA)
					INCLUDING THE
					SECONDARY SUB M
					C.B.A.(VEP60190
		VEP60190A	SECONDARY SUB MAIN C.B.A.	1	(NLA)
					INCLUDED IN MAI
					C.B.A.(VEP61058
		VEP60182B	FRONT PANEL C.B.A.	1	(NLA)
	■	VEP61058A	MAIN C.B.A.		(NLA)
					INCLUDING THE
					SECONDARY SUB M
					C.B.A.(VEP6019C
			CAPACITORS		
C001		ECQU2A224MN	P.CAPACITOR 100V 0.22U	1	
C002		VCC0022	C.CAPACITOR 1000P	1	
C004		VCC0022	C.CAPACITOR 1000P	1	
C006		ECOS2GA820CA	.CAPACITOR 400V 82U	1	
C008		ECQV1H224JZ	P.CAPACITOR 50V 0.22U	1	
C009		ECEA1AU470	E.CAPACITOR 10V 47U	1	
C010		ECEA1VGE101	E.CAPACITOR 35V 100U	1	
C011		ECEA1VGE100	E.CAPACITOR 35V 10U	1	
C012		ECQU2A104MN	P.CAPACITOR 100V 0.1U	1	
C013		ECEA1HU010	E.CAPACITOR 50V 1U	1	
C101		ECEA1EFQ102	E.CAPACITOR 25V 1000U	1	
C102		ECEA1VGE101	E.CAPACITOR 35V 100U	1	
C103		ECEA1VKS100	E.CAPACITOR 35V 10U	1	
C104		ECEA1HKS010	E.CAPACITOR 50V 1U	1	
C106,07		ECEA1EKA470	E.CAPACITOR 25V 47U	2	
C108		ECEA1EKS330	E.CAPACITOR 25V 33U	1	
C110		ECEA1CM102	E.CAPACITOR 16V 1000U	1	
C111		ECEA1CKS220	E.CAPACITOR 16V 22U	1	
C112		ECEA1EGE471	E.CAPACITOR 25V 470U	1	
C113		ECKD2H101KB	C.CAPACITOR 500V 100U	1	
C114		ECEA1EKS4R7	E.CAPACITOR 25V 4.7U	1	
C115		ECEA1EKA470	E.CAPACITOR 25V 47U	1	
C116		ECQV1H473JZ	P.CAPACITOR 50V 0.047U	1	
C201		ECEA1ESN4R7	E.CAPACITOR 25V 4.7U	1	
C202		ECEA1CKS220	E.CAPACITOR 16V 22U	1	
C203		ECEA1EKS100	E.CAPACITOR 25V 10U	1	
C204		ECQV1H224JZ	P.CAPACITOR 50V 0.22U	1	
C205		ECQV1H104JZ	P.CAPACITOR 50V 0.1U	1	
C206		ECEA1CKN330	E.CAPACITOR 16V 33U	1	
C209		ECEA1AKA101	E.CAPACITOR 10V 100U	1	

7. MECHANICAL REPLACEMENT PARTS LIST

Note: 1.* Be sure to make your orders of replacement parts according to this list.
2. IMPORTANT SAFETY NOTICE
Components identified with the mark <!> have the special characteristics for safety. When replacing any of these components, use only the same type.

Ref.No.		Part No.	Part Name & Description	Pcs	Remarks
1(1)		VKM1979	TOP COVER	1	
2(1)		VKM1978	BOTTOM COVER	1	
4(1)		VGH2273	NAME PLATE	1	
5(1)		VYP2988	FRONT PANEL (1) UNIT	1	
6(1)		VSC2983	BOTTOM SHIELD	1	
7(1)		VMZ1505	BOTTOM BARRIER	1	
8(1)		VSC2982	TOP SHIELD	1	
9(1)		VMZ1504	TOP BARRIER	1	
10(1)		EST15317S	POWER SWITCH	1	
11(1)		VEK4948	AC POWER CORD UNIT	1	NV-M1000EN <!>
11(1)		VEK4951	AC POWER CORD UNIT	1	NV-M1000EM <!>
12(1)		VMZ0580	POWER SWITCH COVER	1	
13(1)		VMZ0997	POWER CORD COVER	1	
21(2)		VQT3494	OPERATING INSTRUCTIONS	1	VW-AM10EN <!>
					(NV-M1000EN)
21(2)		VQT3495	OPERATING INSTRUCTION	1	VW-AM10EM <!>
					(NV-M1000EM)
22(2)		VJA0180	BATTERY PACK	1	
			CHARGING CONNECTOR		
23(2)		VJA0573	DC INPUT CABLE	1	

8. ELECTRICAL REPLACEMENT PARTS LIST

Note: 1.* Be sure to make your orders of replacement parts according to this list.
2. IMPORTANT SAFETY NOTICE
Components identified with the mark <!> have the special characteristics for safety. When replacing any of these components, use only the same type.
3. Unless otherwise specified,
All resistors are in OHMS, K=1,000 OHMS. All capacitors are in MICROFARADS(uf), P=uuF.
4. The P.C.Board units marked width'■'show below the main assembled parts.

Ref.No.		Part No.	Part Name & Description	Pcs	Remarks
		VEP61058A	MAIN C.B.A.	1	(NLA)
					INCLUDING THE
					SECONDARY SUB MAIN
					C.B.A.(VEP60190A).
		VEP60190A	SECONDARY SUB MAIN C.B.A.	1	(NLA)
					INCLUDED IN MAIN
					C.B.A.(VEP61058A).
		VEP60182B	FRONT PANEL C.B.A.	1	(NLA)
	■	VEP61058A	MAIN C.B.A.		(NLA)
					INCLUDING THE
					SECONDARY SUB MAIN
					C.B.A.(VEP60190A).
			CAPACITORS		
C001		ECQU2A224MN	P.CAPACITOR 100V 0.22U	1	
C002		VCC0022	C.CAPACITOR 1000P	1	
C004		VCC0022	C.CAPACITOR 1000P	1	
C006		ECOS2GA820CA	.CAPACITOR 400V 82U	1	
C008		ECQV1H224JZ	P.CAPACITOR 50V 0.22U	1	
C009		ECEA1AU470	E.CAPACITOR 10V 47U	1	
C010		ECEA1VGE101	E.CAPACITOR 35V 100U	1	
C011		ECEA1VGE100	E.CAPACITOR 35V 10U	1	
C012		ECQU2A104MN	P.CAPACITOR 100V 0.1U	1	
C013		ECEA1HU010	E.CAPACITOR 50V 1U	1	
C101		ECEA1EFQ102	E.CAPACITOR 25V 1000U	1	
C102		ECEA1VGE101	E.CAPACITOR 35V 100U	1	
C103		ECEA1VKS100	E.CAPACITOR 35V 10U	1	
C104		ECEA1HKS010	E.CAPACITOR 50V 1U	1	
C106,07		ECEA1EKA470	E.CAPACITOR 25V 47U	2	
C108		ECEA1EKS330	E.CAPACITOR 25V 33U	1	
C110		ECEA1CM102	E.CAPACITOR 16V 1000U	1	
C111		ECEA1CKS220	E.CAPACITOR 16V 22U	1	
C112		ECEA1EGE471	E.CAPACITOR 25V 470U	1	
C113		ECKD2H101KB	C.CAPACITOR 500V 100U	1	
C114		ECEA1EKS4R7	E.CAPACITOR 25V 4.7U	1	
C115		ECEA1EKA470	E.CAPACITOR 25V 47U	1	
C116		ECQV1H473JZ	P.CAPACITOR 50V 0.047U	1	
C201		ECEA1ESN4R7	E.CAPACITOR 25V 4.7U	1	
C202		ECEA1CKS220	E.CAPACITOR 16V 22U	1	
C203		ECEA1EKS100	E.CAPACITOR 25V 10U	1	
C204		ECQV1H224JZ	P.CAPACITOR 50V 0.22U	1	
C205		ECQV1H104JZ	P.CAPACITOR 50V 0.1U	1	
C206		ECEA1CKN330	E.CAPACITOR 16V 33U	1	
C209		ECEA1AKA101	E.CAPACITOR 10V 100U	1	

Ref.No.		Part No.	Part Name & Description	Pcs	Remarks
D001		D3SBA60	DIODE	1	
D003,04		RMPG06GPKG3	DIODE	2	
D005		MA4200	DIODE	1	
D006		MA4270	DIODE	1	
D007,08		MA4051M	DIODE	2	
D009		MA4100M	DIODE	1	
D101		FML12SPLF609	DIODE	1	
D102		RMPG06GPKG3	DIODE	1	
D103,04		ERC81-004	DIODE	2	
D106		MA4091	DIODE	1	
D107-10		MA4300M	DIODE	4	
D111		MA4120M	DIODE	1	
D201-04		MA165	DIODE	4	
F001		XBA2C16TB0	FUSE	1	
IC001		VCR0297	IC	1	
IC002		VCR0296	IC	1	
IC101		AN78L12	IC	1	
IC201,02		UPC358C	IC	2	
IC203		UPC393C	IC	1	
L001		ELF18D456A	COIL	1	
L101		VLQEL06F680	COIL	1	
L102		VLQ0098	COIL	1	
L103		VLP0067	COIL	1	
Q101		2SK705	TRANSISTOR	1	(Y,C)
Q201,02		2SD636	TRANSISTOR	2	
QR101		UN1212	TRANSISTOR-RESISTOR	1	
			RESISTORS		
R001		ERC12GJ334	S.RESISTOR 1/2W 330K	1	
R002-05		ERDS2TJ333	C.RESISTOR 1/4W 33K	4	
R006,07		ERDS2TJ823	C.RESISTOR 1/4W 82K	2	
R008		ERDS2TJ101	C.RESISTOR 1/4W 100	1	
R009,10		ERDS2TJ333	C.RESISTOR 1/4W 33K	2	
R012		ERDS2TJ271	C.RESISTOR 1/4W 270	1	
R013		ERDS2TJ823	C.RESISTOR 1/4W 82K	1	
R014		ERDS2TJ4R7	C.RESISTOR 1/4W 4.7	1	
R015		ERDS2TJ823	C.RESISTOR 1/4W 82K	1	
R101		ERF2AKR10	W.RESISTOR 2W 0.1	1	
R105		ERF2AKR10	W.RESISTOR 2W 0.1	1	
R106-09		ERDS2TJ272	C.RESISTOR 1/4W 2.7K	4	
R110,11		ERDS2TJ103	C.RESISTOR 1/4W 10K	2	
R112,13		ERDS2TJ821	C.RESISTOR 1/4W 820	2	
R201		EROS2CKF1001	M.RESISTOR 1/4W 1K	1	
R202		EROS2CKF1002	M.RESISTOR 1/4W 10K	1	
R203		EROS2CKF1802	M.RESISTOR 1/4W 18K	1	
R204		EROS2CKF2001	M.RESISTOR 1/4W 2K	1	
R205		EROS2CKF3000	M.RESISTOR 1/4W 300	1	
R206		ERDS2TJ681	C.RESISTOR 1/4W 680	1	
R207		ERDS2TJ224	C.RESISTOR 1/4W 220K	1	
R208,09		ERDS2TJ153	C.RESISTOR 1/4W 15K	2	
R210		ERDS2TJ104	C.RESISTOR 1/4W 100K	1	
R211		ERDS2TJ224	C.RESISTOR 1/4W 220K	1	
R212		ERDS2TJ102	C.RESISTOR 1/4W 1K	1	
R213		ERDS2TJ223	C.RESISTOR 1/4W 22K	1	
R214		ERDS2TJ104	C.RESISTOR 1/4W 100K	1	
R215		ERDS2TJ224	C.RESISTOR 1/4W 220K	1	
R216		ERDS2TJ124	C.RESISTOR 1/4W 120K	1	
R217		ERDS2TJ332	C.RESISTOR 1/4W 3.3K	1	

Ref.No.		Part No.	Part Name & Description	Pcs	Remarks
R218		ERDS2TJ562	C.RESISTOR 1/4W 5.6K	1	
R219		ERD25TJ106	C.RESISTOR 15M	1	
R220		ERDS2TJ153	C.RESISTOR 1/4W 15K	1	
T001		VLT0597	TRANSFORMER	1	
TH101		ERTD2ZHL154S	THERMISTOR	1	
TH201		ERTD2ZHL503S	THERMISTOR	1	
VR201		EVN32CA00B24	V.RESISTOR 20K	1	
VR202		EVN32CA00B14	V.RESISTOR 10K	1	
ZNR1		ENB461D-05A	SURGE ABSORBER 460V	1	
			MISCELLANEOUS		
		TJC6320	FUSE HOLDER	2	
		VJS1629	CONNECTOR 8P	1	
		VSC2984	HEAT SINK	1	
		VMP2481	FIX ANGLE	1	
		VMZ0429	FUSE COVER	1	
		VMZ1361	CAPACITOR COVER	2	
		VMZ1512	INSULATION SHEET	1	
		VJR0161W	PACK PIN 7P	2	(SECONDARY SUB MAIN)
		VJR0283	PACK PIN 2P	1	(SECONDARY SUB MAIN)
	■	VEP60182B	FRONT PANEL C.B.A.		(NLA)
			CAPACITORS		
C301,02		ECQV1H473JZ	P.CAPACITOR 50V 0.047U	2	
C303		ECEA1EKS220	E.CAPACITOR 25V 22U	1	
D301		GL3ED8	DIODE	1	
D302		GL3HD18	DIODE	1	
D303-06		MA4300M	DIODE	4	
L301		VLQ0440	COIL	1	
			RESISTORS		
R301		ERDS2TJ472	C.RESISTOR 1/4W 4.7K	1	
R302		ERDS2TJ681	C.RESISTOR 1/4W 680	1	
			MISCELLANEOUS		
		KL04	LED HOLDER	2	
		VJJ0246	3PIN DC JACK	1	
		VJJ0248	DC JACK	1	
		VJP1629	8PIN CONNECTOR	1	

Line Adaptor

VW-KM10EN

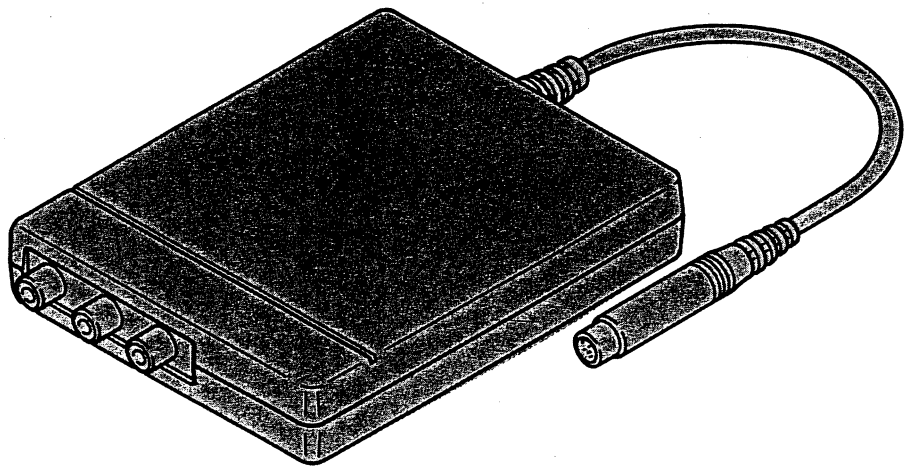

SPECIFICATIONS

ITEM	SPECIFICATION
POWER	Source: DC 12V
	Consumption: 0.4W (DC 12V)
VIDEO	Input: VIDEO IN connector (Phono type) 1.0Vp-p, 75Ω terminated
AUDIO	Input: AUDIO IN connector (Phono type) −1.0dB, 47kΩ terminated
DIMENSIONS	85mm(W)×27mm(H)×100mm(D)
WEIGHT	120g

Weight and dimensions shown are approximate.
Specifications are subject to change without notice.

CONTENTS

1. CONNECTION DIAGRAM 1
2. MAIN C.B.A. 2
3. LINE ADAPTOR SCHEMATIC DIAGRAM 3
4. EXPLODED VIEW 5
   ❶ CASING PARTS SECTION 5
   ❷ PACKING PARTS SECTION 6
5. MECHANICAL REPLACEMENT PARTS LIST 7
6. ELECTRICAL REPLACEMENT PARTS LIST 8

1. CONNECTION DIAGRAM

Before connecting, make sure that the Operation On/Off Switch of the VHS Movie is in the "OFF" position.

- It is also possible to use the Battery Pack or Car Battery Cord instead of the AC Adaptor.

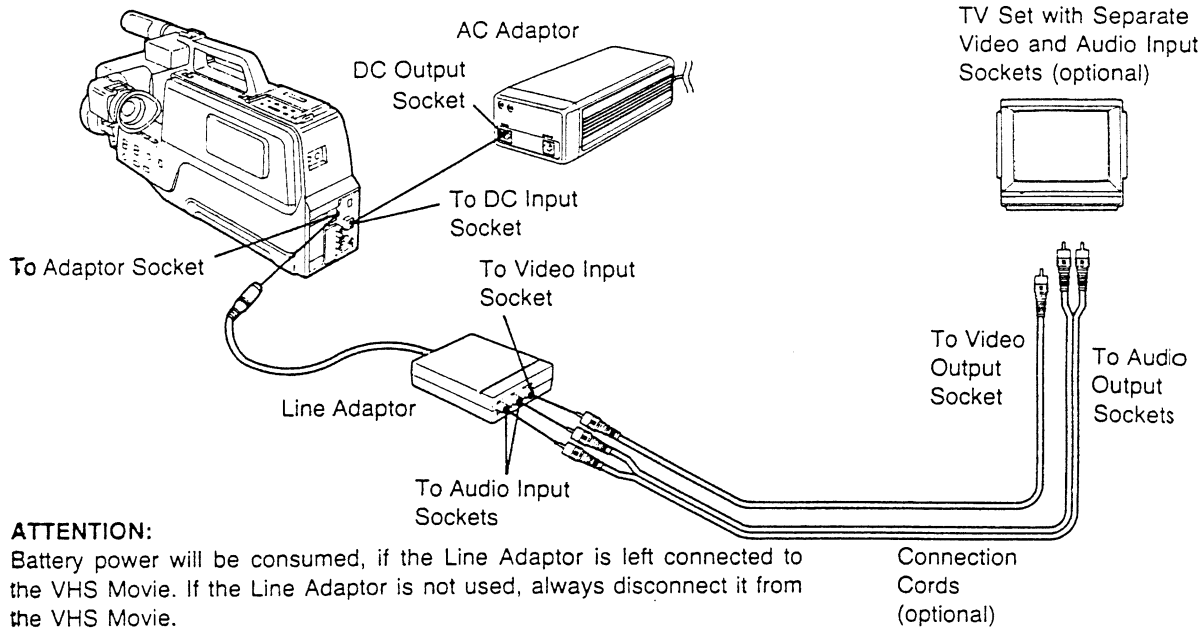

ATTENTION:
Battery power will be consumed, if the Line Adaptor is left connected to the VHS Movie. If the Line Adaptor is not used, always disconnect it from the VHS Movie.

2. MAIN C.B.A. (VEP60199A)

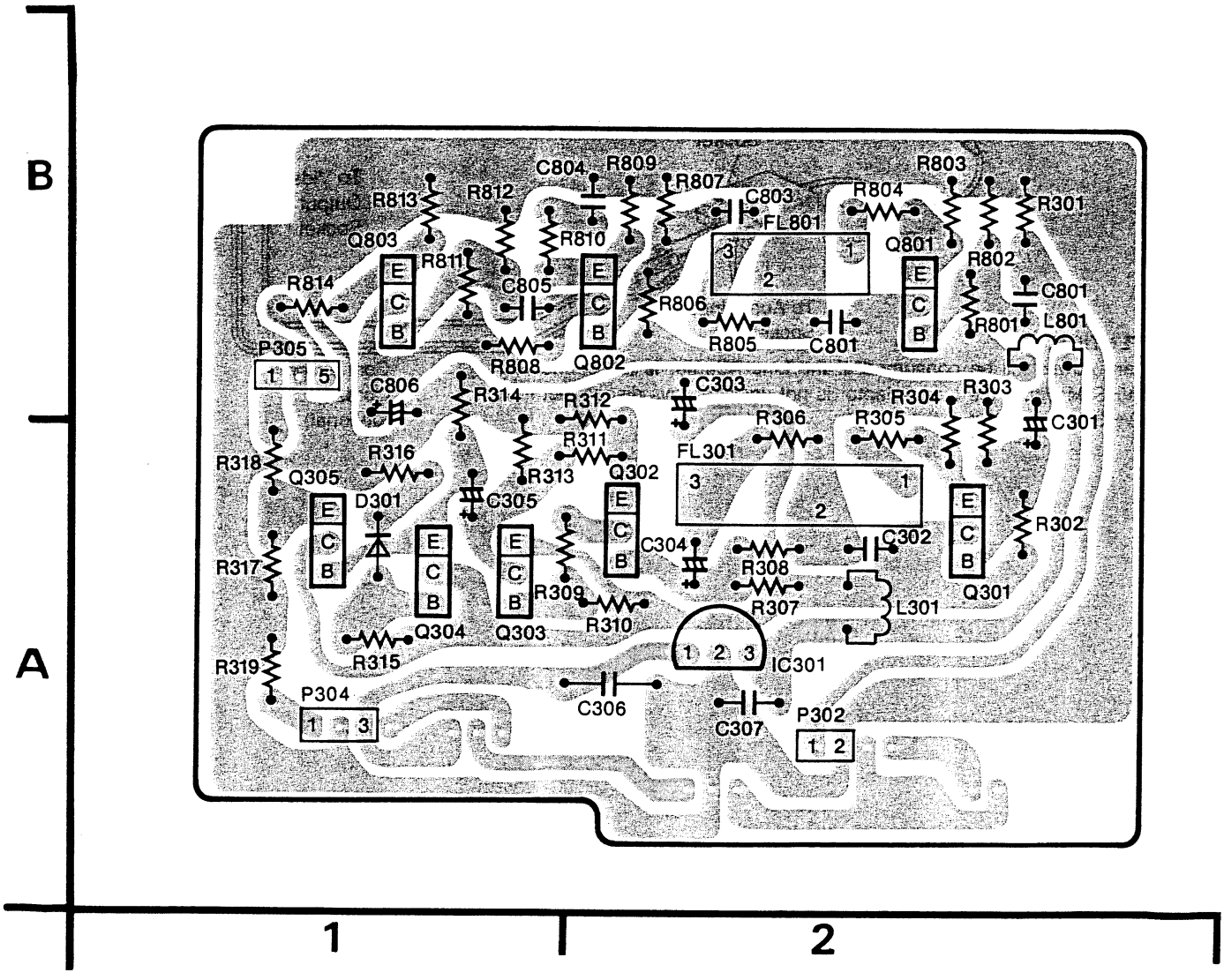

3. LINE ADAPTOR SCHEMATIC DIAGRAM

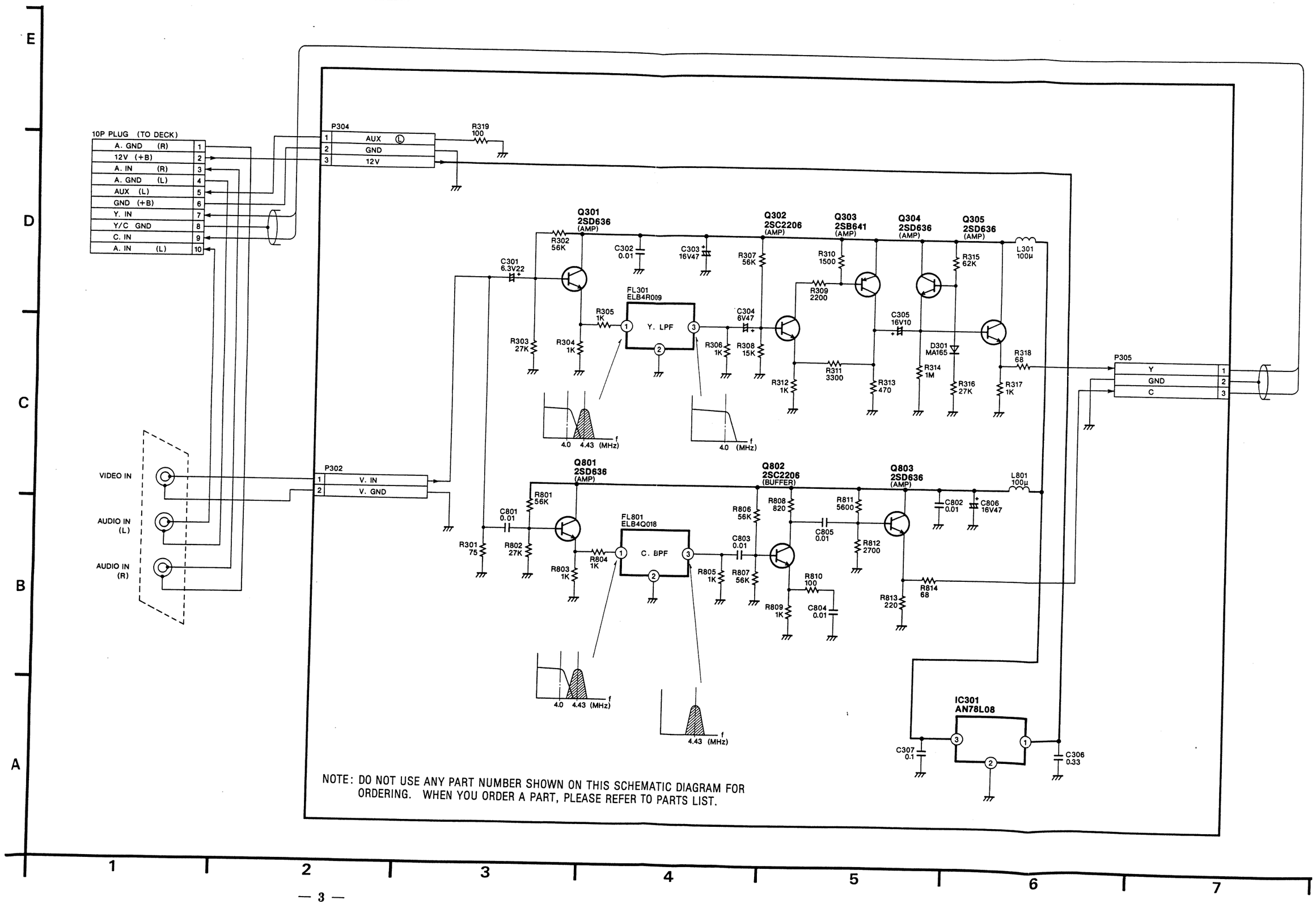

4. EXPLODED VIEW

❶ CASING PARTS SECTION

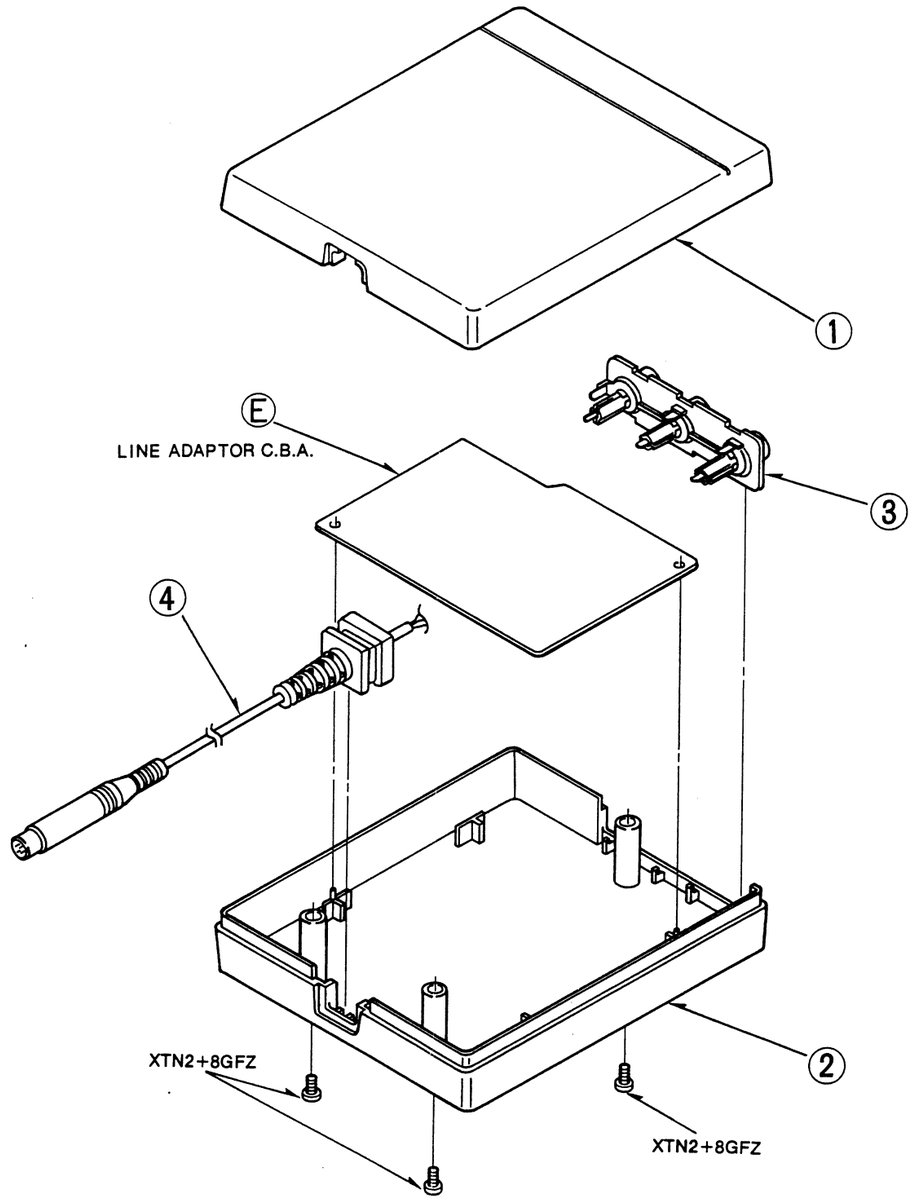

❷ PACKING PARTS SECTION

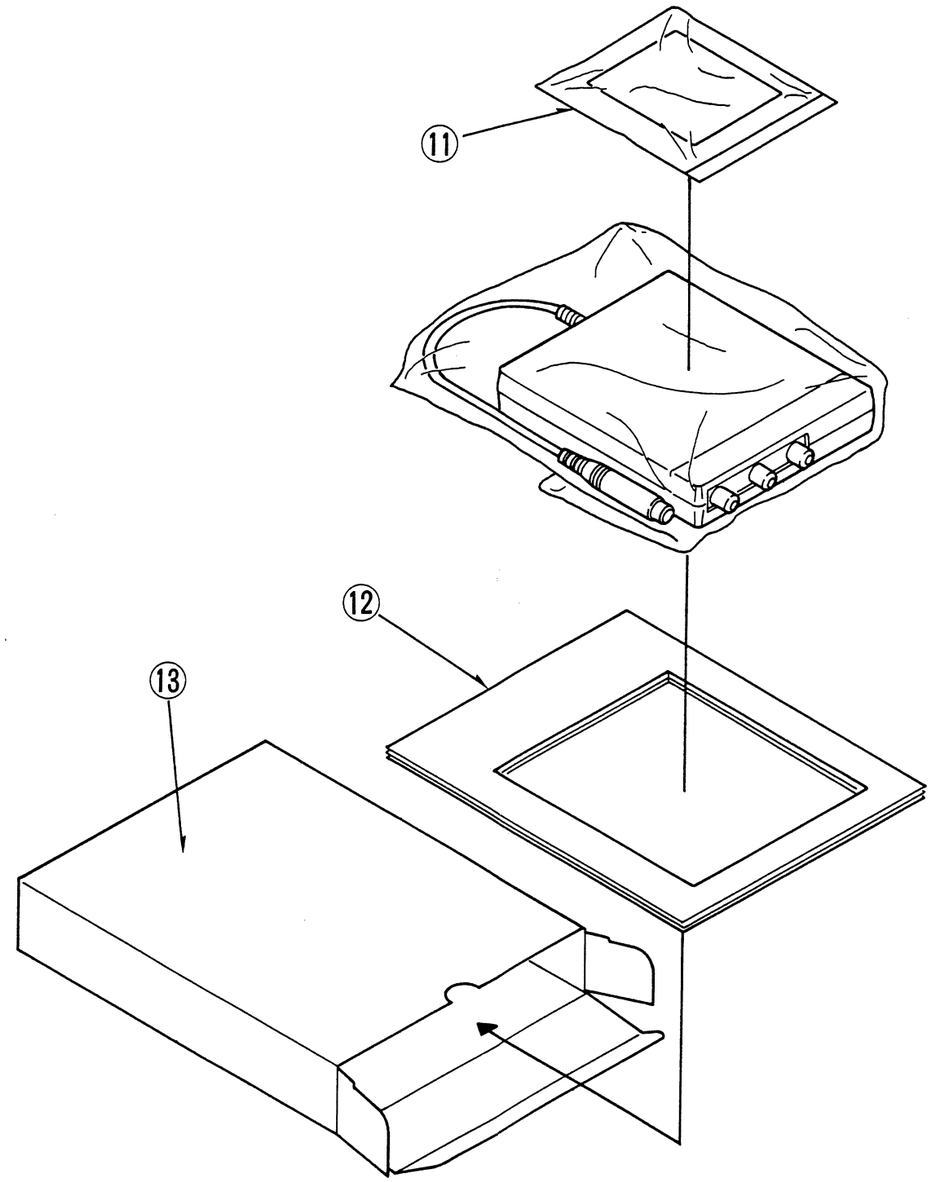

5. MECHANICAL REPLACEMENT PARTS LIST

Note:1.* Be sure to make your orders of replacement parts according to this list.
2.IMPORTANT SAFETY NOTICE
Components identified with the mark <!> have the special characteristics for safety. When replacing any of these components,use only the same type.

Ref.No.		Part No.	Part Name & Description	Pcs	Remarks
1(1)		VKM2197	TOP COVER	1	
2(1)		VKM2055	BOTTOM COVER	1	
3(1)		VEJ0950	TERMINAL PLATE	1	
4(1)		VJA0587	10P CABLE UNIT	1	
11(2)		VQT3542	OPERATING INSTRUCTIONS	1	<!>
12(2)		VPN1390	PAT	1	
13(2)		VPK1194	PACKING BOX	1	

6. ELECTRICAL REPLACEMENT PARTS LIST

Note: 1. * Be sure to make your orders of replacement parts according to this list.
2. IMPORTANT SAFETY NOTICE
Components identified with the mark <!> have the special characteristics for safety. When replacing any of these components, use only the same type.
3. Unless otherwise specified,
All resistors are in OHMS ,K=1,000 OHMS. All capacitors are in MICROFARADS(uf),P=uuF.
4. The P.C.Board units marked width'■'show below the main assembled parts.

Ref.No.		Part No.	Part Name & Description	Pcs	Remarks
		VEP60199A	MAIN C.B.A.	1	(NLA)
	■	VEP60199A	MAIN C.B.A.		(NLA)
			CAPACITORS		
C301		ECEA0JK220	E.CAPACITOR 6.3V 22U	1	
C302		ECKF1H103ZF	C.CAPACITOR 50V 0.01U	1	
C303		ECEA1CK470	E.CAPACITOR 16V 47U	1	
C304		ECEA0JK470	E.CAPACITOR 6.3V 47U	1	
C305		ECEA1CK100	E.CAPACITOR 16V 10U	1	
C306		ECQV1H334JZ	P.CAPACITOR 50V 0.33U	1	
C307		ECQV1H104JZ	P.CAPACITOR 50V 0.1U	1	
C801		ECKF1H103ZF	C.CAPACITOR 50V 0.01U	1	
C802		ECKF1H103ZF	C.CAPACITOR 50V 0.01U	1	
C803		ECKF1H103ZF	C.CAPACITOR 50V 0.01U	1	
C804		ECKF1H103ZF	C.CAPACITOR 50V 0.01U	1	
C805		ECKF1H103ZF	C.CAPACITOR 50V 0.01U	1	
C806		ECEA1CK470	E.CAPACITOR 6.3V 47U	1	
D301		MA165	DIODE	1	
FL301		ELB4R009	FILTER	1	
IC301		AN78L08	IC	1	
L301		VLQEL05F101K	COIL 100UH	1	
L801		VLQEL05F101K	COIL 100UH	1	
P302		VJP1229T	CONNECTOR 2P	1	
P304		VJP1230T	CONNECTOR 3P	1	
P305		VJP1230T	CONNECTOR 3P	1	
Q301		2SD636	TRANSISTOR	1	(Q,R,S)
Q302		2SC2206	TRANSISTOR	1	(A,B,C)
Q303		2SB641	TRANSISTOR	1	(Q,R,S)
Q304		2SD636	TRANSISTOR	1	(Q,R,S)
Q305		2SD636	TRANSISTOR	1	(Q,R,S)
Q801		2SD636	TRANSISTOR	1	(Q,R,S)
Q802		2SC2206	TRANSISTOR	1	(A,B,C)
Q803		2SD636	TRANSISTOR	1	(Q,R,S)

Ref.No.		Part No.	Part Name & Description	Pcs	Remarks
R301		ERDS2TJ750	C.RESISTOR 1/4W 75	4	
R302		ERDS2TJ563	C.RESISTOR 1/4W 56K	2	
R303		ERDS2TJ273	C.RESISTOR 1/4W 27K	1	
R304		ERDS2TJ102	C.RESISTOR 1/4W 1K	2	
R305		ERDS2TJ102	C.RESISTOR 1/4W 1K	1	
R306		ERDS2TJ102	C.RESISTOR 1/4W 1K	1	
R307		ERDS2TJ563	C.RESISTOR 1/4W 56K	1	
R308		ERDS2TJ153	C.RESISTOR 1/4W 15K	1	
R309		ERDS2TJ222	C.RESISTOR 1/4W 2.2K	1	
R310		ERDS2TJ152	C.RESISTOR 1/4W 1.5K	1	
R311		ERDS2TJ332	C.RESISTOR 1/4W 3.3K	4	
R312		ERDS2TJ102	C.RESISTOR 1/4W 1K	2	
R313		ERDS2TJ471	C.RESISTOR 1/4W 470	2	
R314		ERDS2TJ105	C.RESISTOR 1/4W 1M	1	
R315		ERDS2CKG6202	M.RESISTOR 1/4W 62K	1	
R316		ERDS2CKG2702	M.RESISTOR 1/4W 27K	1	
R317		ERDS2TJ102	C.RESISTOR 1/4W 1K	1	
R318		ERDS2TJ680	C.RESISTOR 1/4W 68	1	
R319		ERDS2TJ101	C.RESISTOR 1/4W 100	1	
R801		ERDS2TJ563	C.RESISTOR 1/4W 56K	1	
R802		ERDS2TJ273	C.RESISTOR 1/4W 27K		
R803		ERDS2TJ102	C.RESISTOR 1/4W 1K		
R804		ERDS2TJ102	C.RESISTOR 1/4W 1K		
R805		ERDS2TJ102	C.RESISTOR 1/4W 1K		
R806		ERDS2TJ563	C.RESISTOR 1/4W 56K		
R807		ERDS2TJ563	C.RESISTOR 1/4W 56K		
R808		ERDS2TJ821	C.RESISTOR 1/4W 820		
R809		ERDS2TJ102	C.RESISTOR 1/4W 1K		
R810		ERDS2TJ101	C.RESISTOR 1/4W 100		
R811		ERDS2TJ562	C.RESISTOR 1/4W 5.6K		
R812		ERDS2TJ272	C.RESISTOR 1/4W 2.7K		
R813		ERDS2TJ221	C.RESISTOR 1/4W 220		
R814		ERDS2TJ680	C.RESISTOR 1/4W 68		